Polarimeter to Unify the Corona and Heliosphere

NFI Instrument Status Overview

Robin Colaninno

NFI Instrument Lead

This work is supported by NASA

PUNCH 4 Science Meeting

July 6-7, 2023

Boulder, CO

NFI Overview

- Combined NFI & WFI FOV provide first:
  - Wide-field, polarimetric, high resolution views of corona-solar wind transition
  - NFI: 5.75 -32 $R_\odot$, WFI: 20-180 $R_\odot$
- Provides high spatial/temporal resolution in the inner FOV
  - 1 observatory in polar orbit
  - Continuous 4 min observing cadence

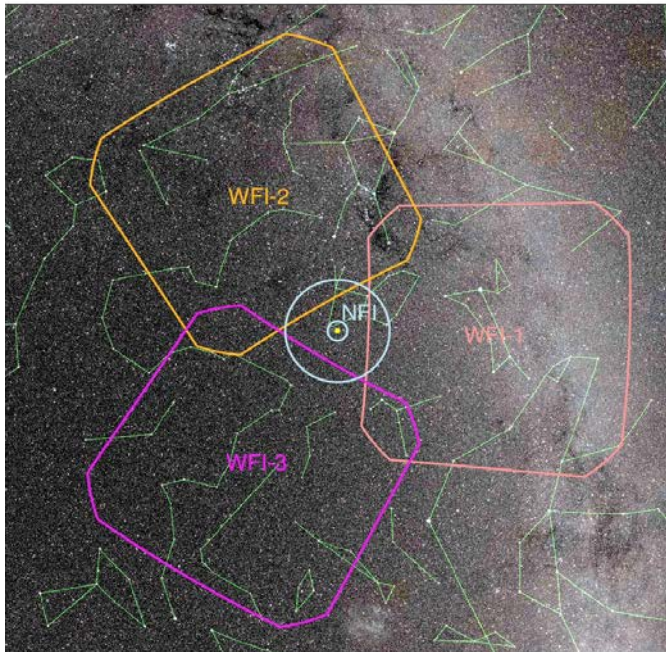

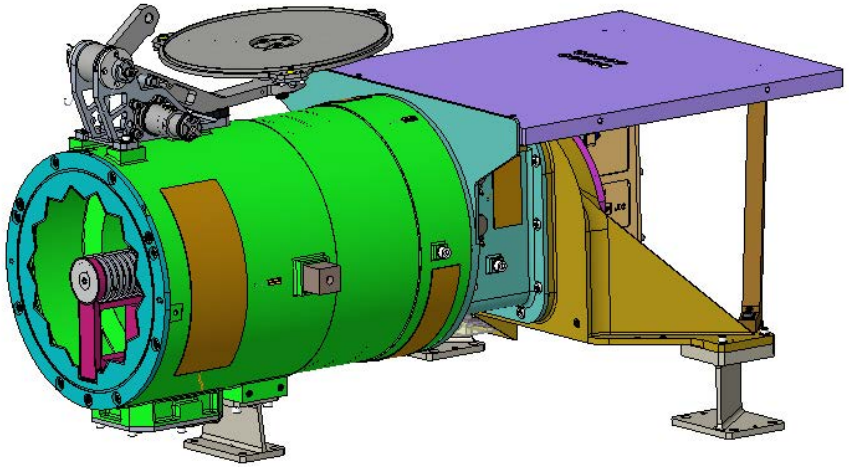

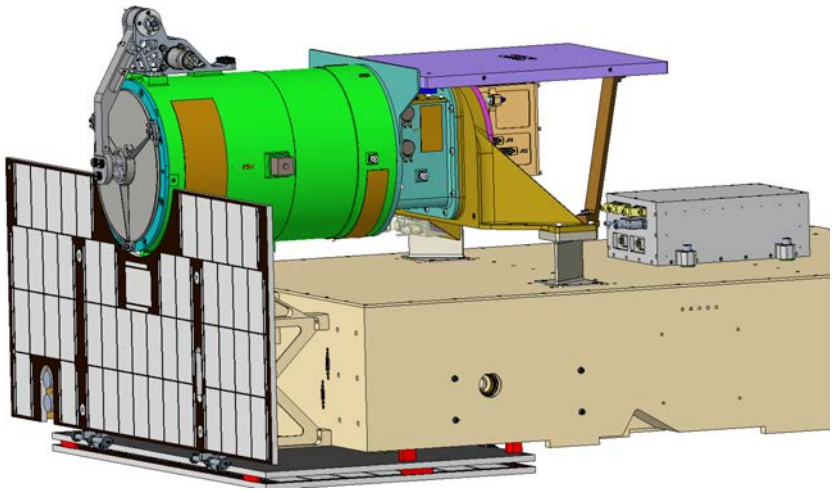

U.S. NAVAL RESEARCH LABORATORY

NFI Instrument Layout

Side View

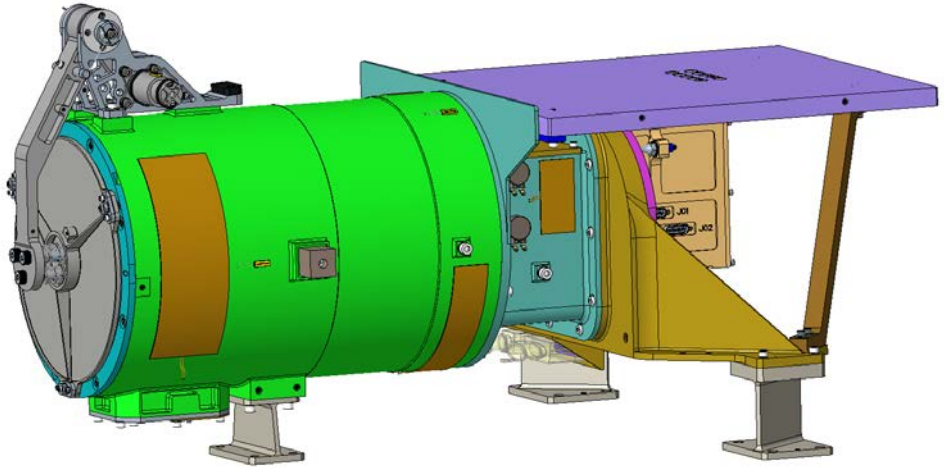

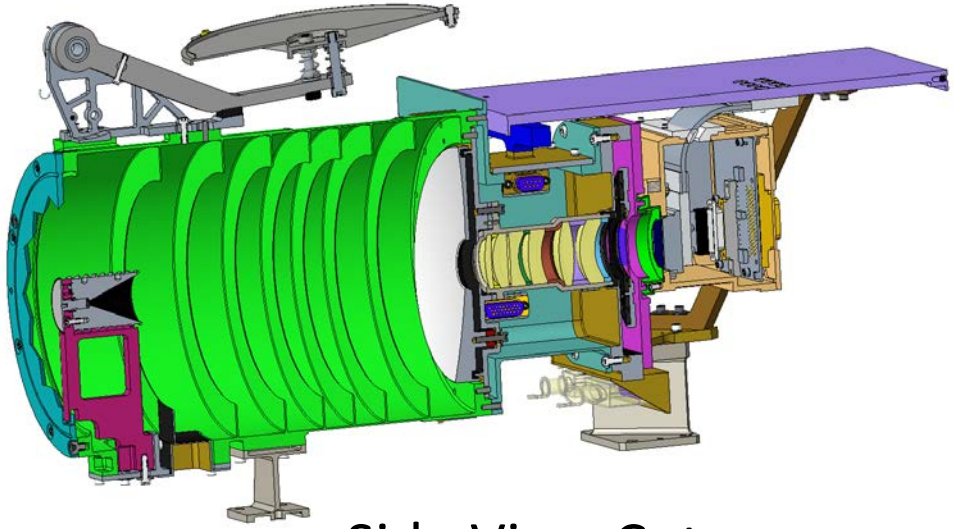

Side View Cutaway

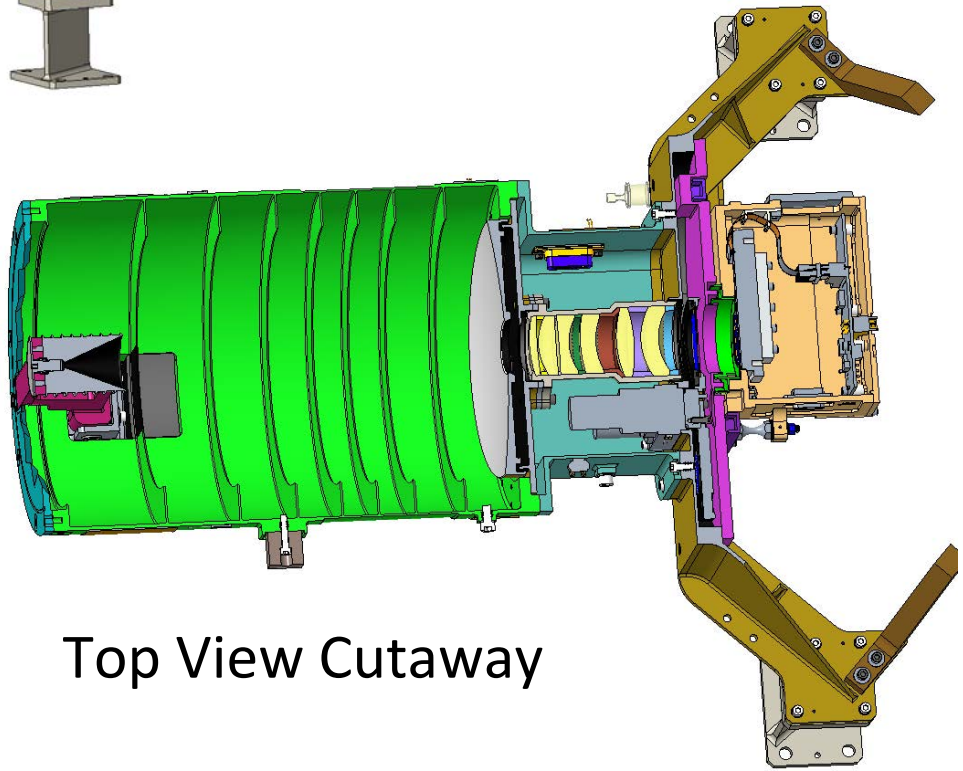

Top View Cutaway

NFI Physical Block Diagram

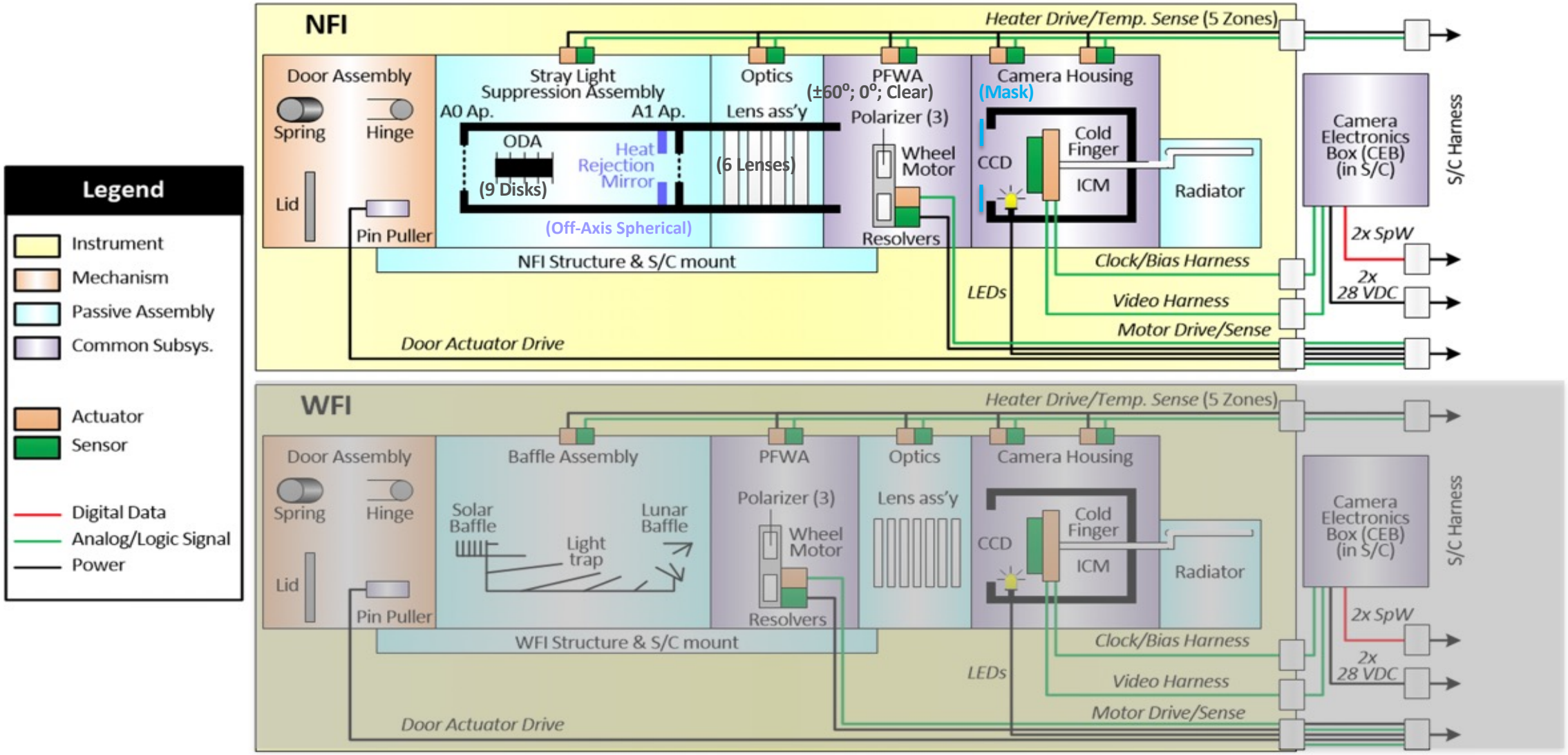

NFI Observing Plan

- Conops common to WFI & NFI
- Two sets of polarization sequences per 8 min roll cadence
- Each image a summation of 3 exposures

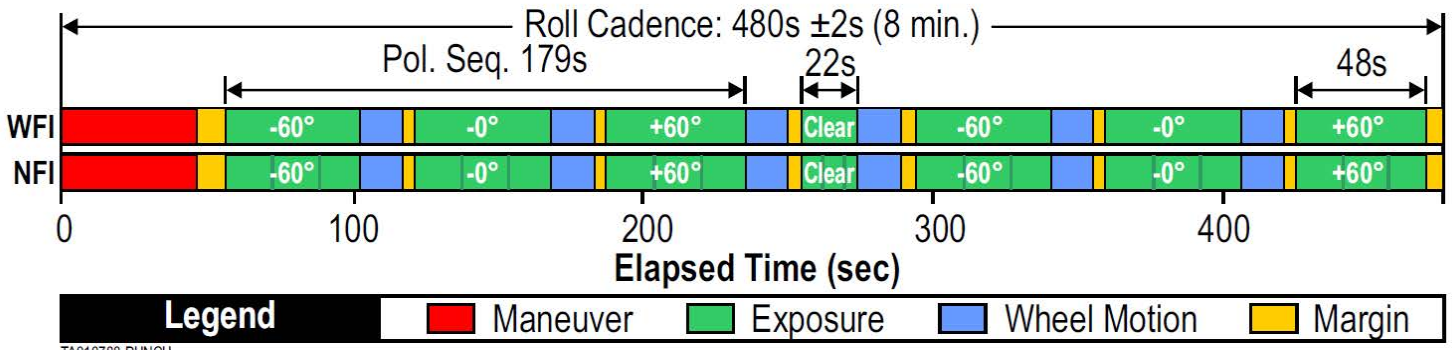

PUNCH Observing Sequence Schedule			
Time (s)	Length + margin	NFI Action	WFI Action
0	47+4	Roll & set PFW to -60°	Roll & set PFW to -60°
51	48+1(*)	Expose 3x13s at -60°	Expose 45s at -60°
98	15+5	Set PFW to 0° & settle	Set PFW to 0° & settle
118	48+1(*)	Expose 3x13s at 0°	Expose 45s at 0°
165	15+5	Set PFW to 60° & settle	Set PFW to 60° & settle
185	48+1(*)	Expose 3x13s at 60°	Expose 45s at 60°
232	15+5	Set PFW to CL & settle	Set PFW to CL & settle
252	22+1(*)	Expose 3x5s at CL	Expose 19s at CL
273	15+5	Set PFW to -60° & settle	Set PFW to -60° & settle
293	48+1(*)	Expose 3x13s at -60°	Expose 45s at -60°
340	15+5	Sep PFW to 0° & settle	Sep PFW to 0° & settle
360	48+1(*)	Expose 3x13s at 0°	Expose 45s at 0°
407	15+5	Set PFW to 60° & settle	Set PFW to 60° & settle
427	48+1(*)	Expose 3x13s at 60°	Expose 45s at 60°
474	1 to 11	Sync for next roll	Sync for next roll
(*) 2-second overlap with following event			

NFI Stray-Light Suppression Assembly (SSA)

- SSA design has:
  - Occulter Disk Assembly (ODA) & pylon
  - Forward tube baffles
  - Front aperture A0
  - Heat Rejection Mirror (HRM)
  - Entrance aperture A1
- Vignetting from the ODA ends at 21.9 $R_\odot$
  - Optimized for the coronal brightness gradient and overlap with the WFI FOV

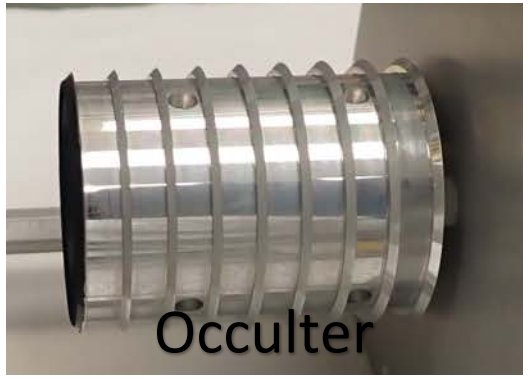

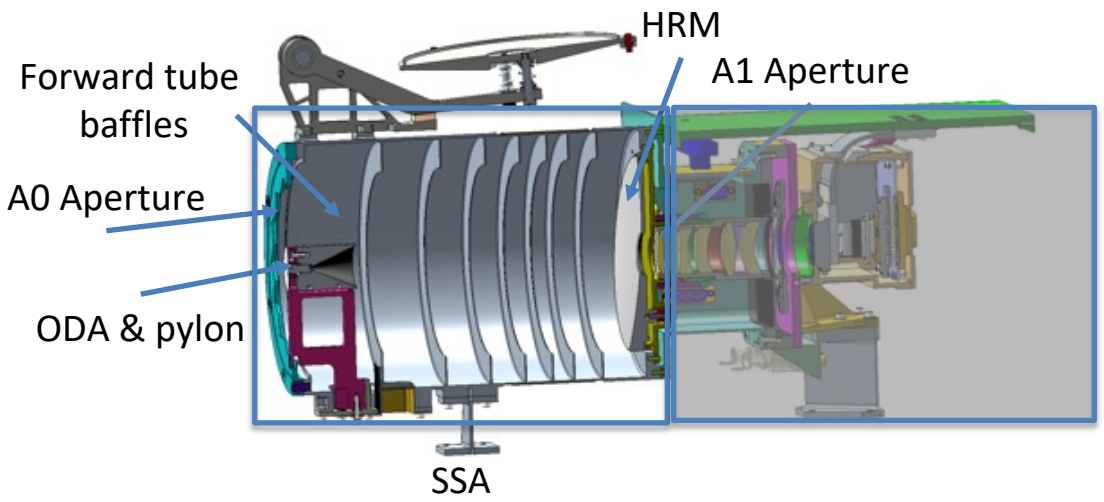

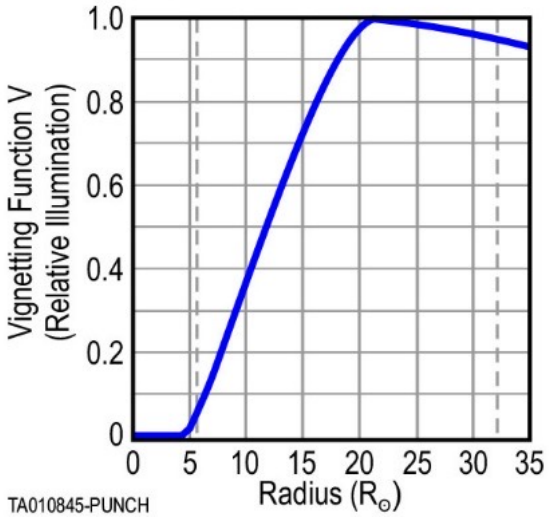

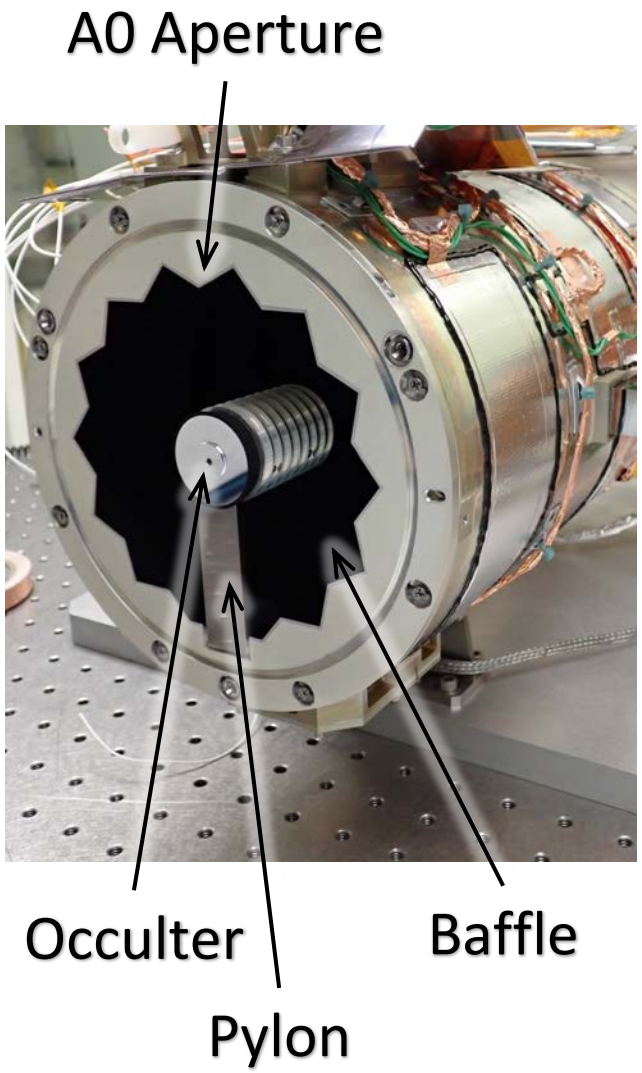

NFI Optical Lens Assembly (OLA)

- NRL developed design
  - Six optical elements
  - Achromaticity between 450-750nm
  - >85% throughput, includes bandpass filters
  - F/4.5 lens
  - Plate scale 30”/15 µm pixel.

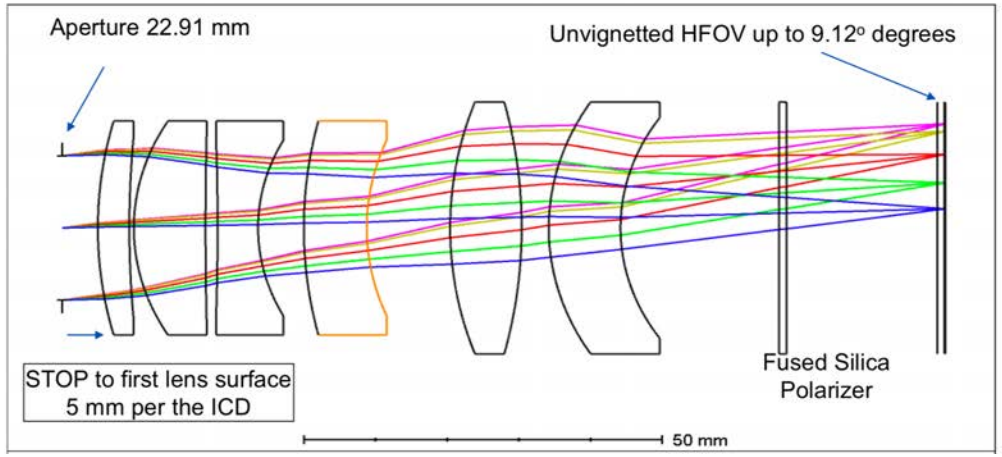

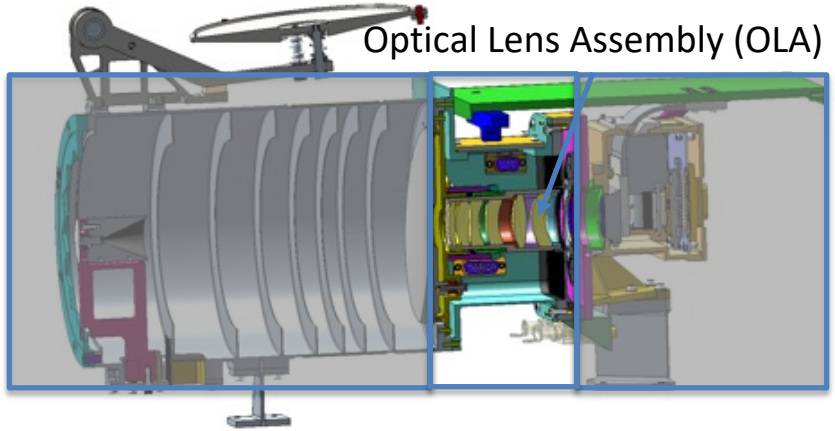

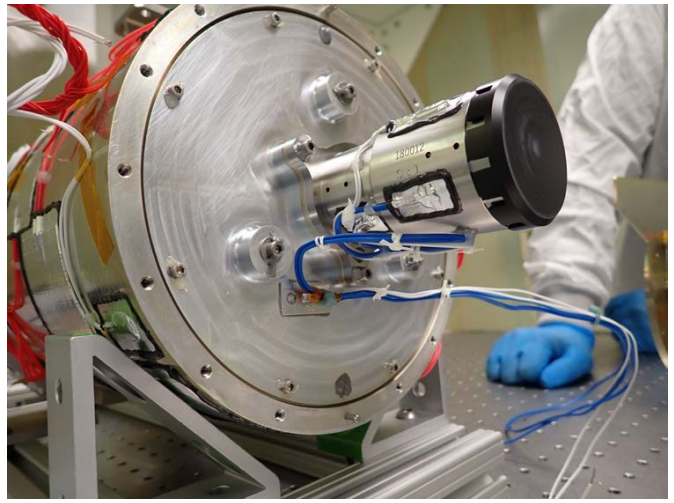

Lens assembly integrated onto the baffle and A1 bulkhead.

NFI Heat Rejection Mirror

- Minimizes scattered light in SSA and heating of instrument
  - Off-centered, parabolic mirror
  - 255-mm focal length
  - Creates an image of the Sun opposite the occulter pylon
  - Scatter due to surface imperfections 8.8×10^{-12} CBE+C

HRM

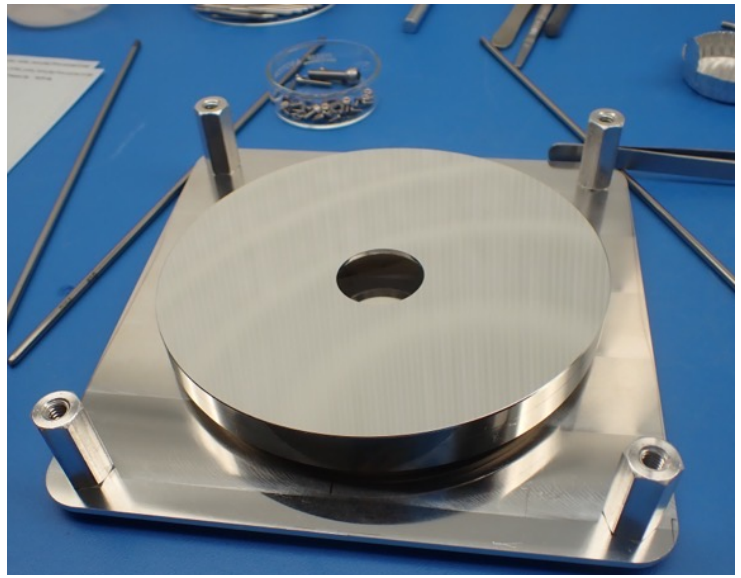

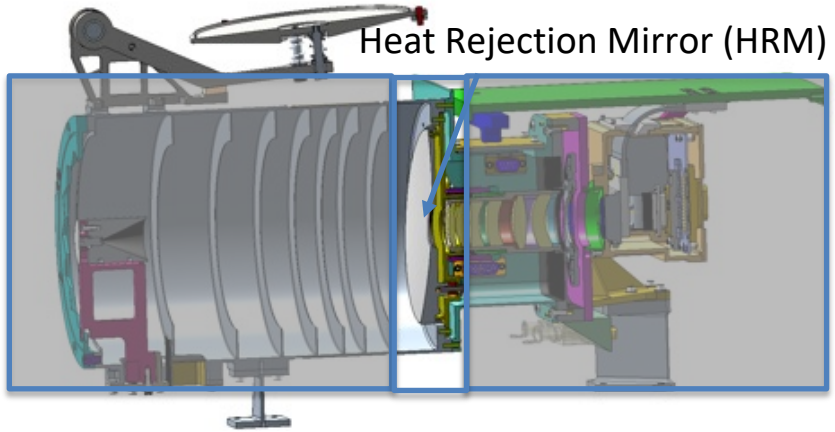

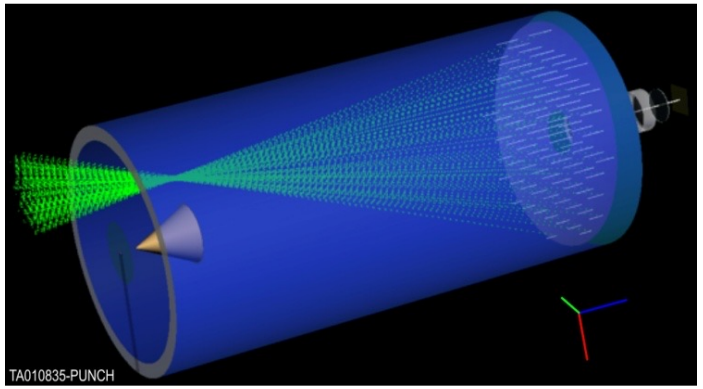

HRM Focal Point

NFI Structure

- Aluminum tube construction
- Three piece design
  - SSA tube, optical housing, camera box
- Alignment determined by shims at the interfaces
- NFI Structure mounts to S/C via 3-point Ti kinematic mount
  - Thermally isolated from S/C
  - Provides alignment with S/C

FM camera box

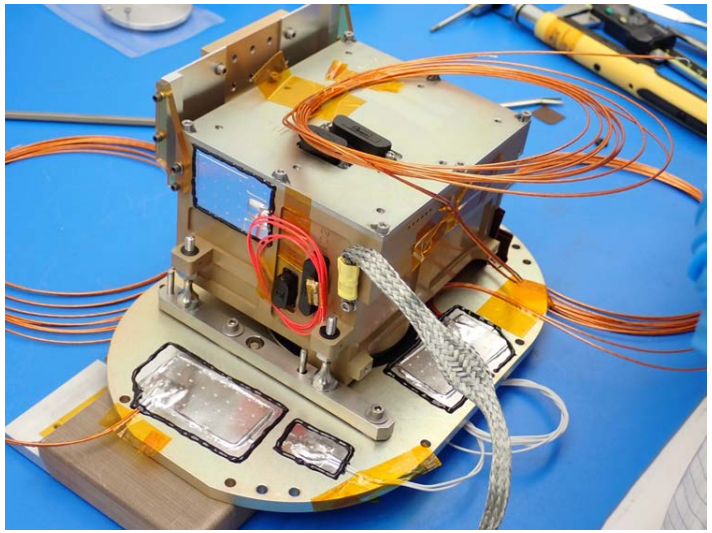

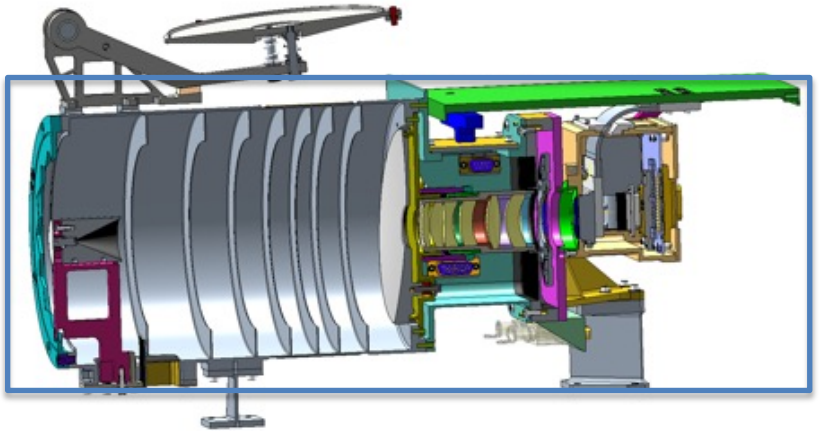

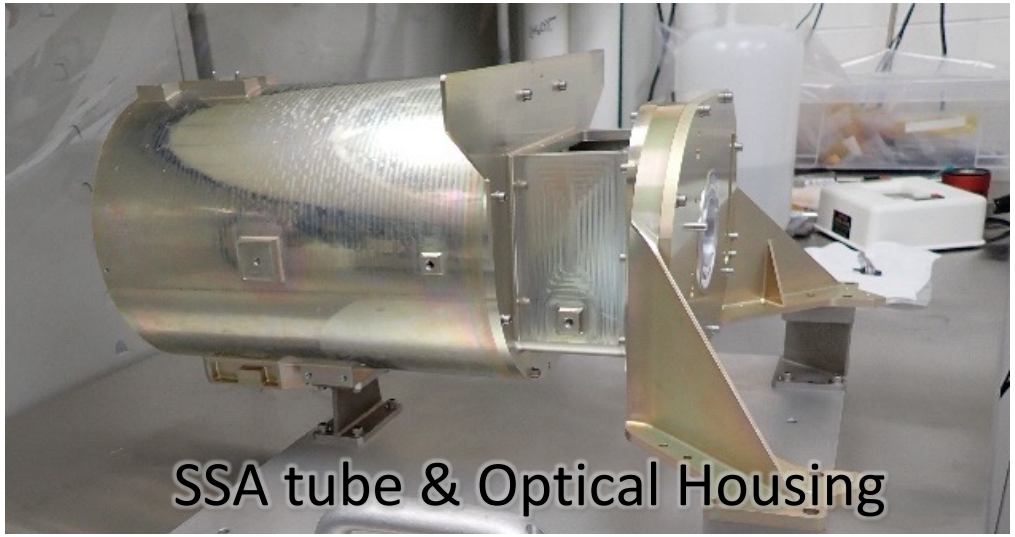

NFI Door

- Single one-time-open door
  - Provides contamination protection during S/C I&T, launch and early operations
  - All elements behind A0 for clear 180° field of regard
- Paraffin Wax Resettable Pin-Puller
  - Common to NFI and WFI

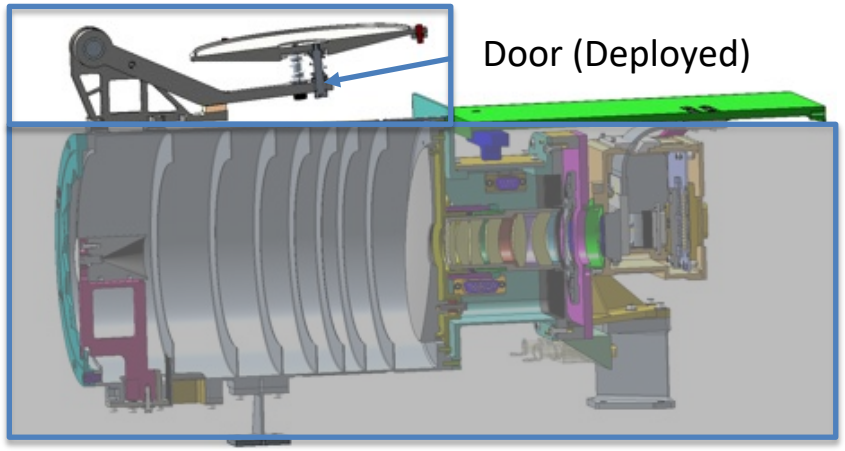

Door Integration Test

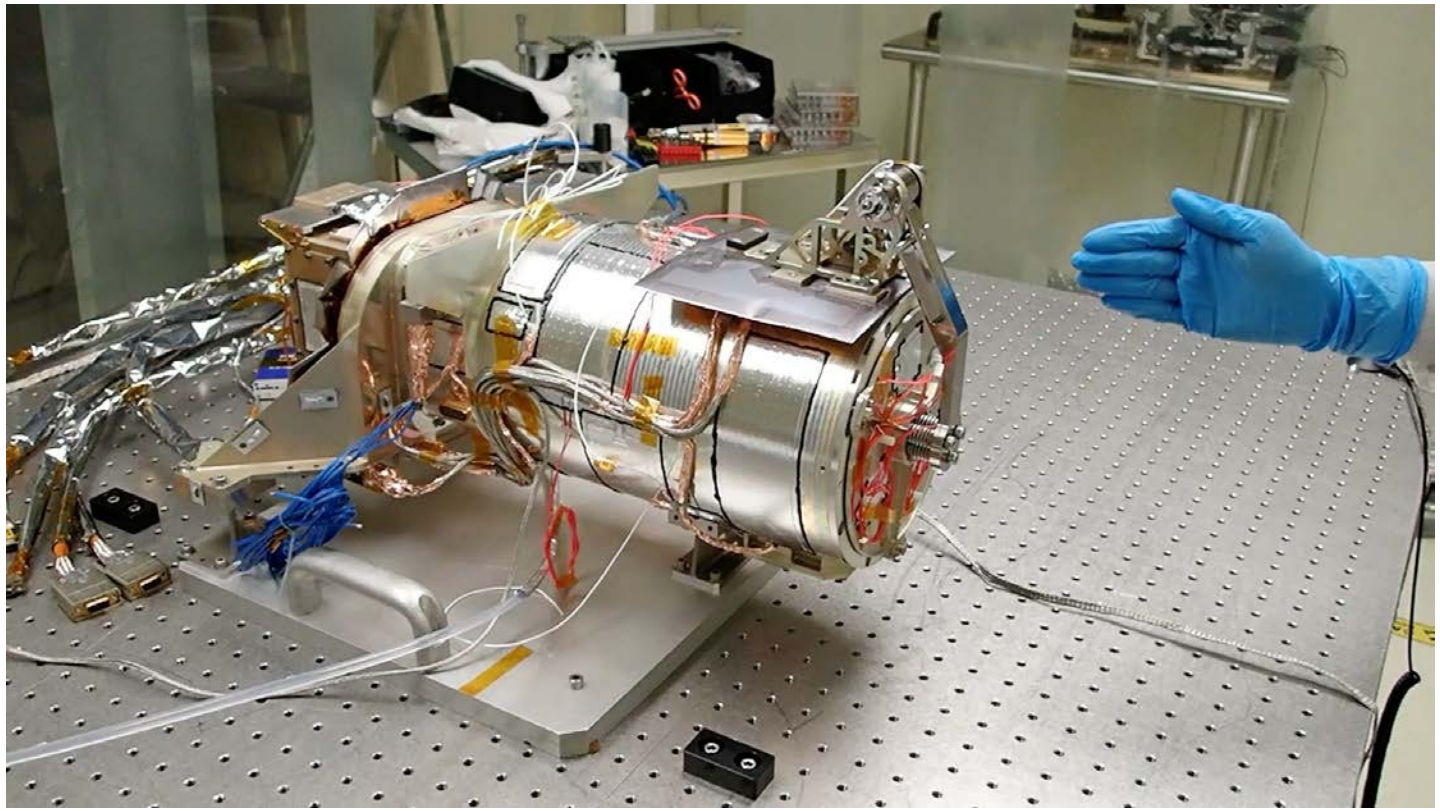

Polarizing Filter Wheel (PFW)

- PFW is common to WFI & NFI
- Provided by NRL to NFI & WFI
- 5-position filter wheel
  - Filters: -60°, 0°, +60° linear polarizers
  - Clear glass (optical focus consistency)
  - Blank (for Safing, Stim LED lamp)
- Linear Polarizers
  - Al nanowire lithographically applied to glass
  - Superior contrast ratio (>1000:1) and transmittance (>85%)

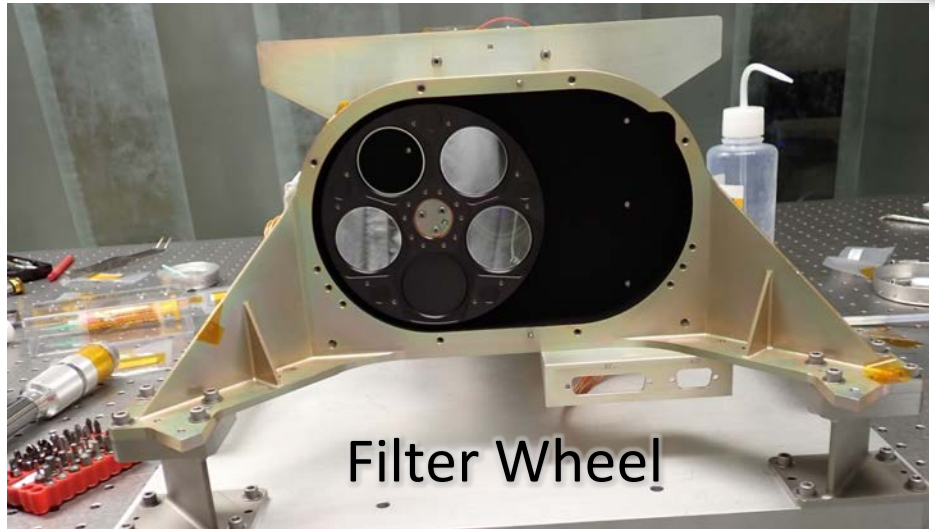

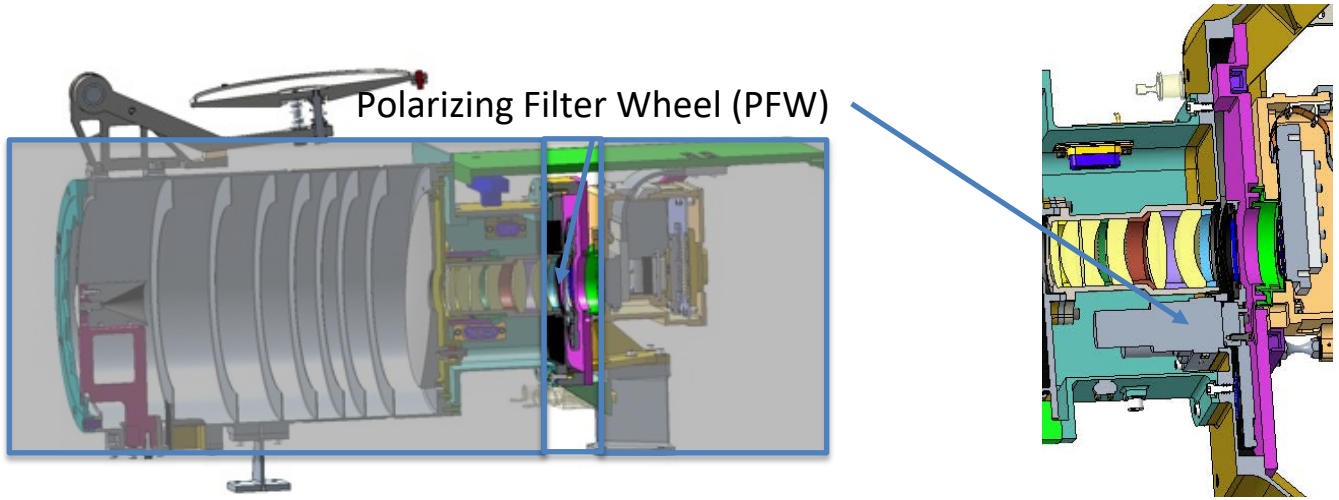

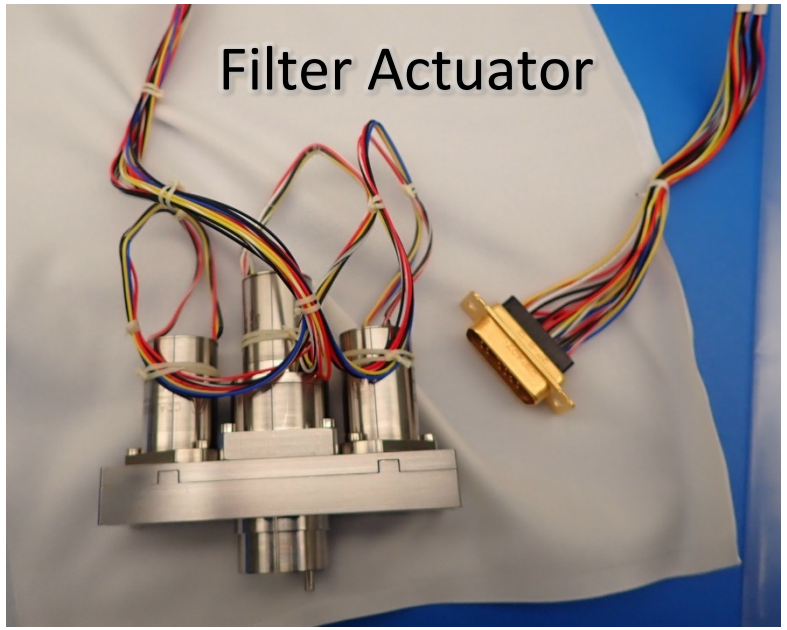

PUNCH Camera

- Camera system identical in WFI & NFI
- Build by RAL, STEREO Heritage
- Teledyne-E2V CCD
  - 2k x 2k Imaging Area
  - 2k x 4k pseudo-charge-transfer CCD

PUNCH EM CCD - full-frame readout with frame-transfer storage area 4200 x 2148 pixels

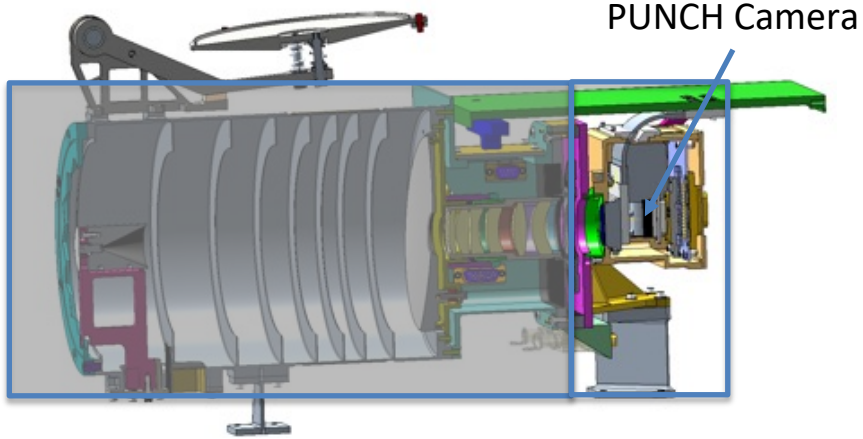

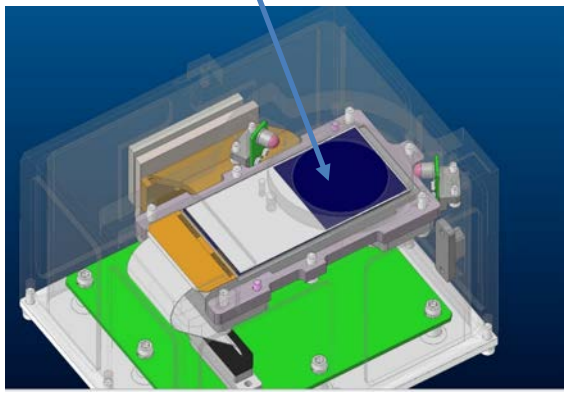

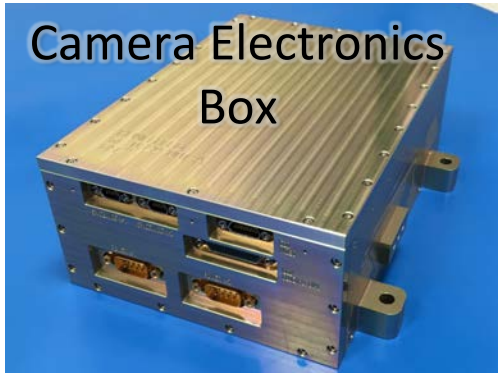

Optical Testing

- Sub system optical testing
  - Occulter and pylon scattering
  - HRM scatter and focus
  - Lens transmission, passband, and resolution
- Optical Alignment
  - Occulter to A1 aperture alignment
  - HRM Return alignment
  - Lens alignment and focus check

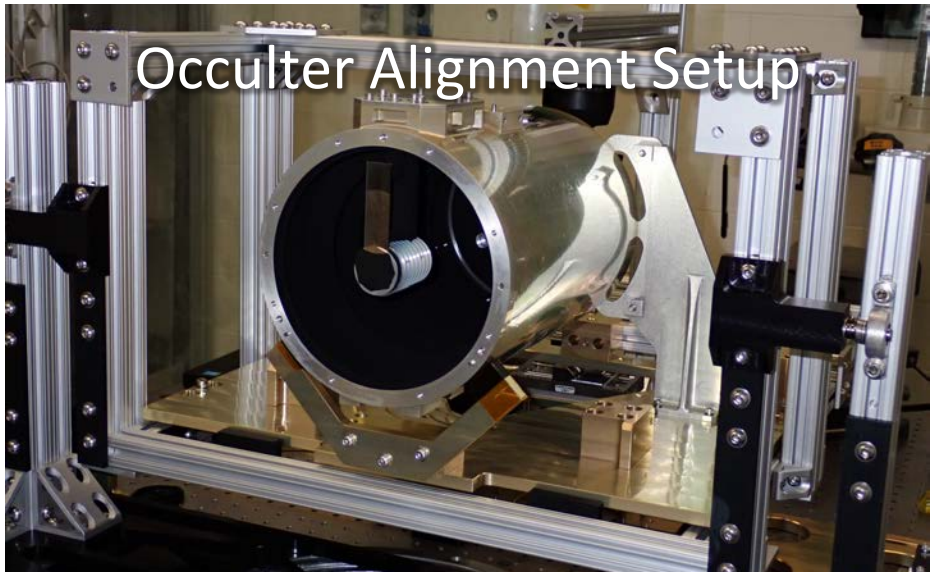

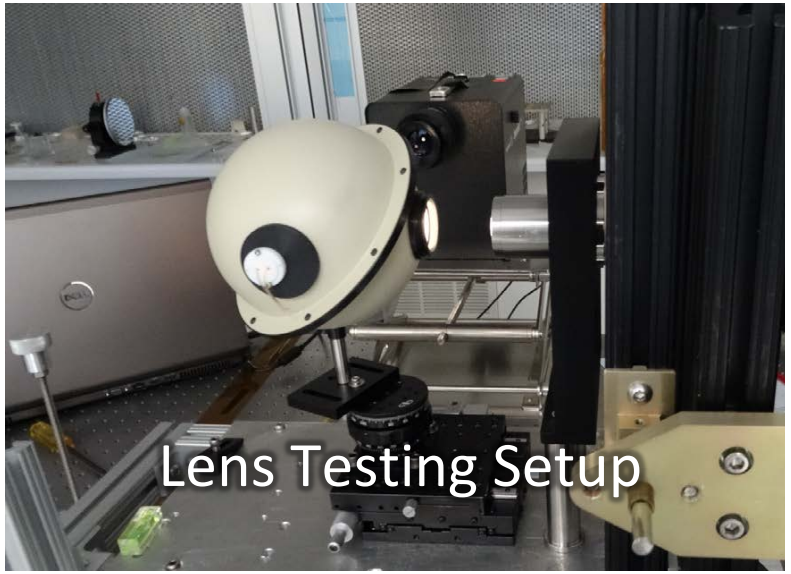

Baffle Illuminated with Alignment Target

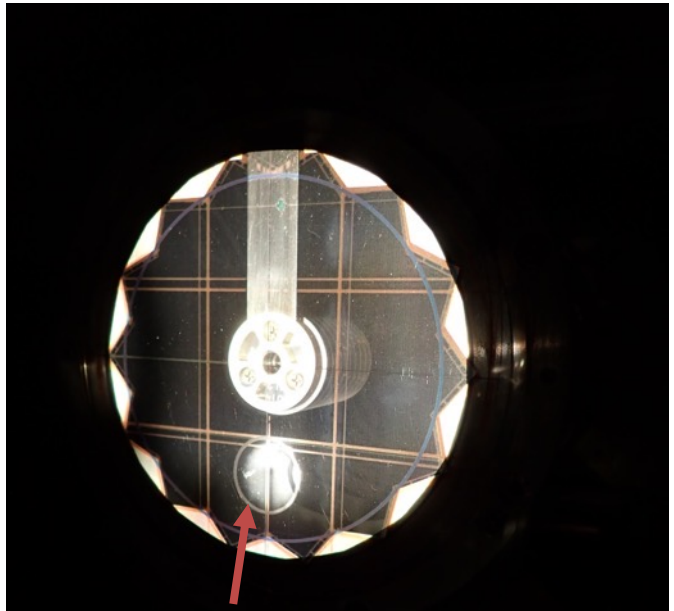

Focus Ring with Return
All light reflected off the HRM focused into return ring.
Meets Requirements

Pre-Environmental Testing: SCOTCH Testing

- Optical Testing of Complete instrument
  - In vacuum at operational temperatures
  - Solar simulator provides collmiated light

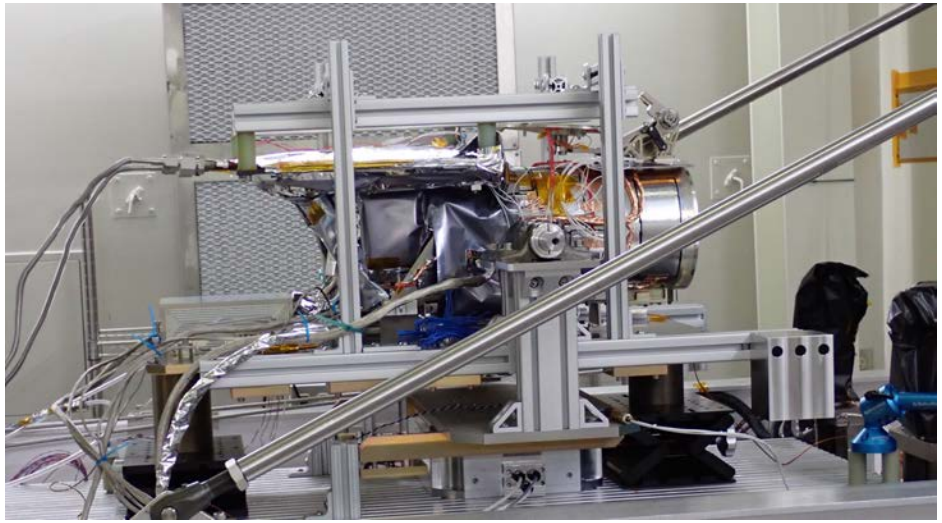

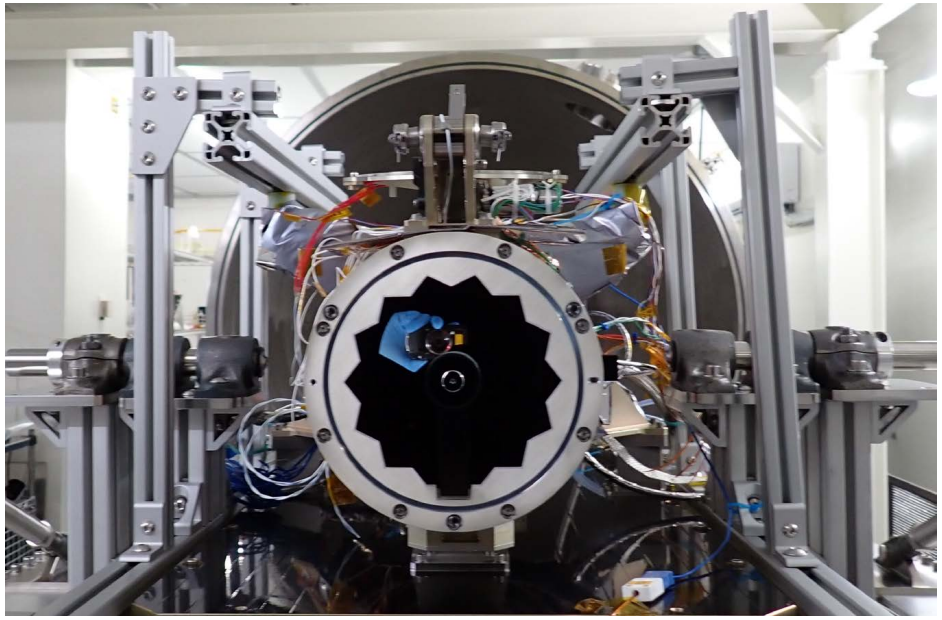

Environmental Testing: Vibration

- Simulates vibrations seen at launch
  - Each axis of the instrument is tested independently

Z-axis

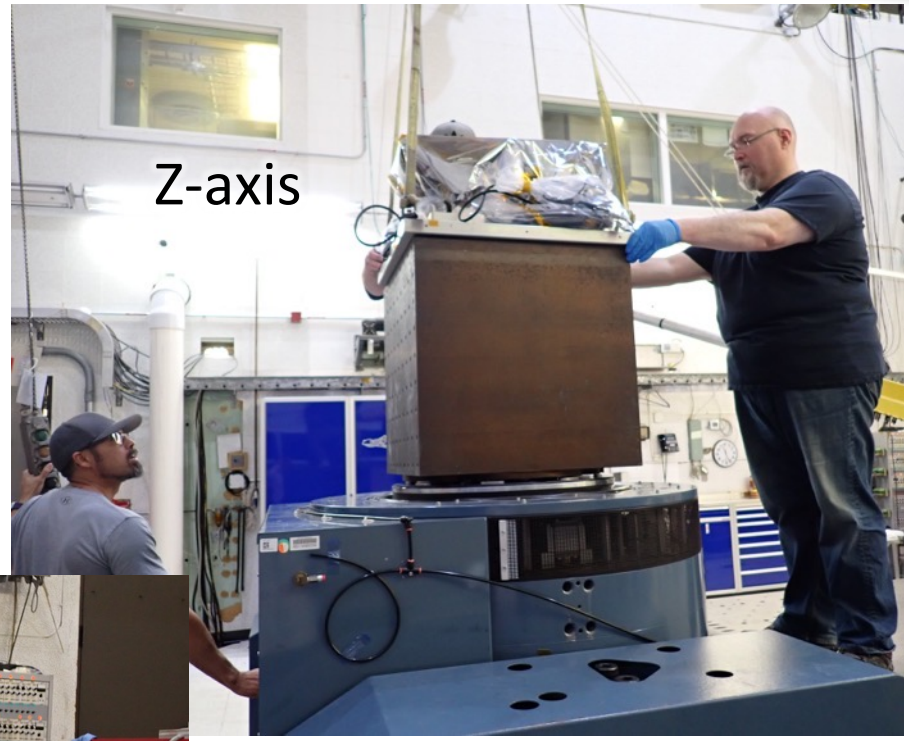

X-axis

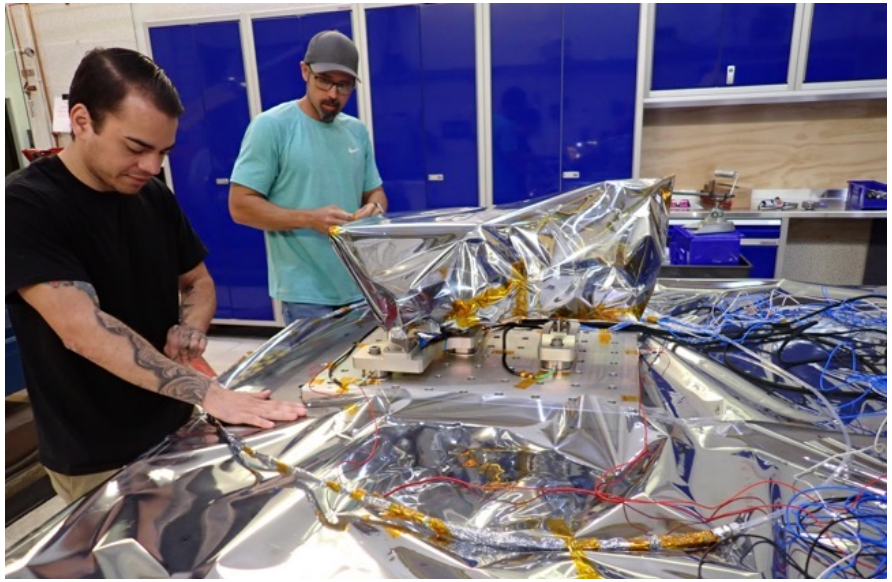

Y-axis

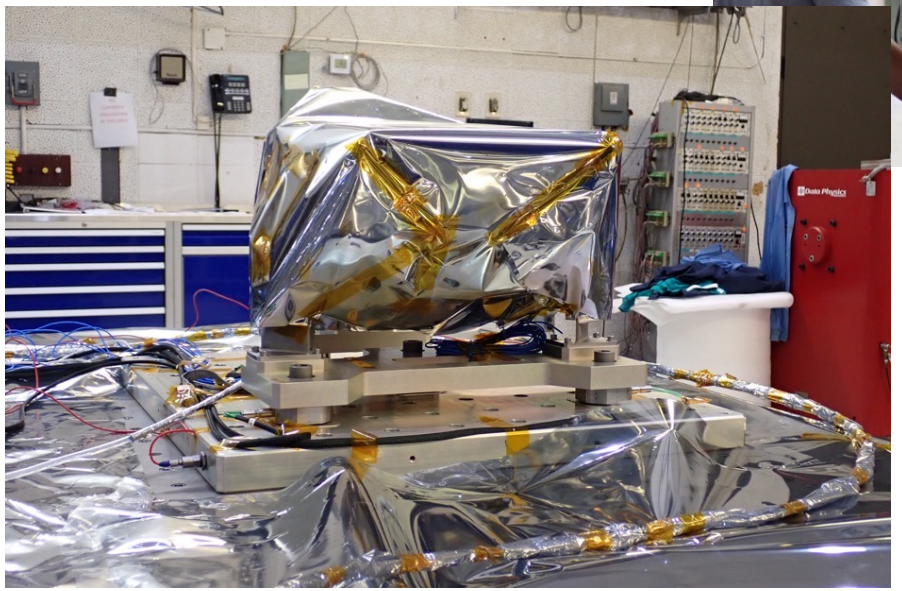

Environmental Testing: TVAC

- Thermal Vacuum Testing
  - Simulates the temperatures seen on-obit in vacuum

Pre-TVAC Bakeout

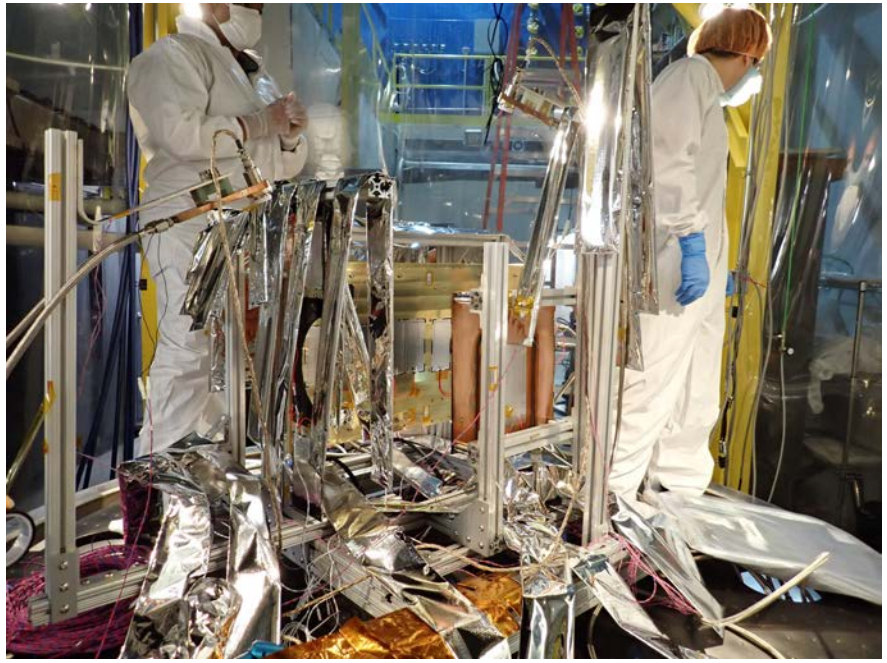

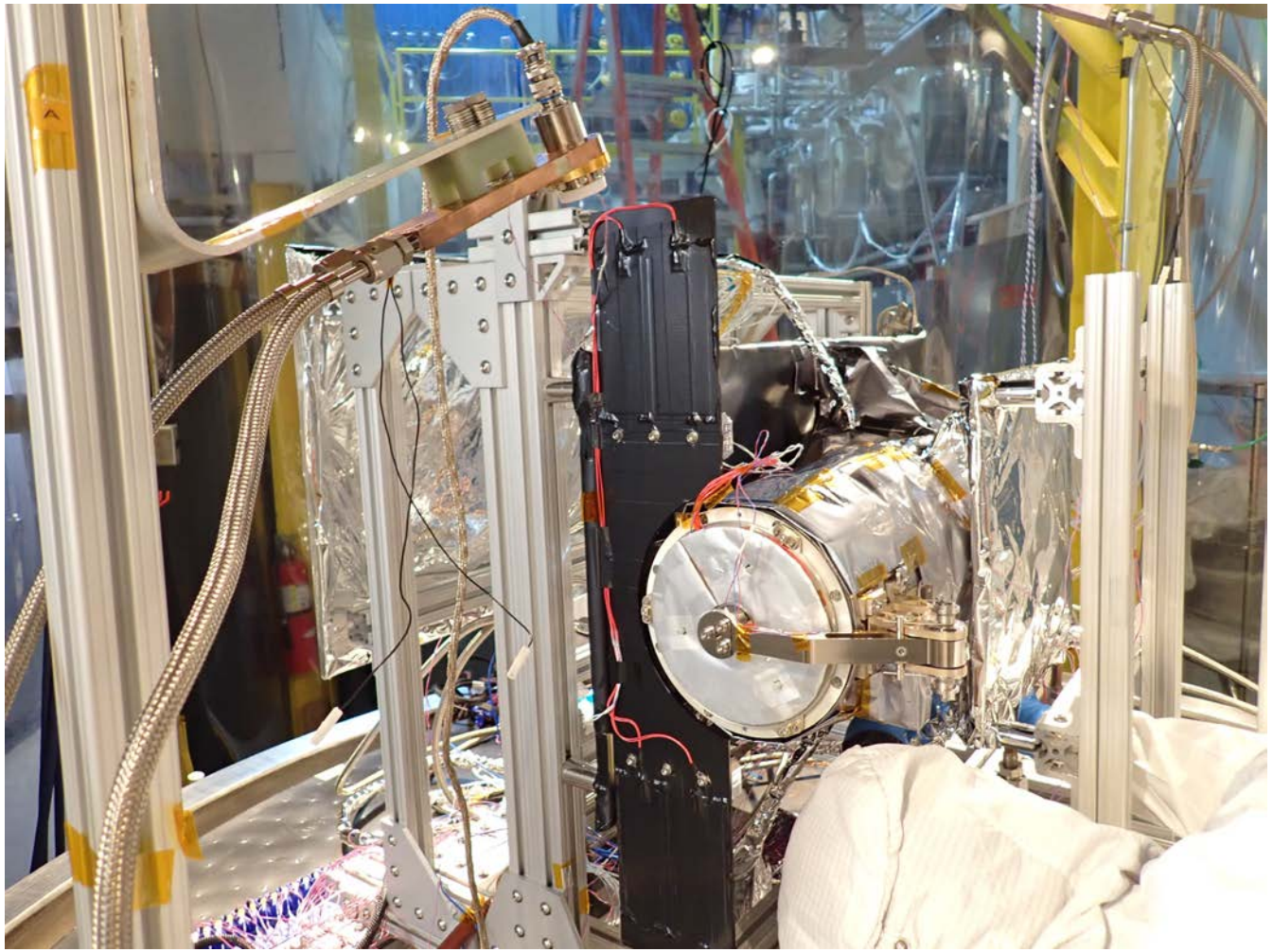

Summary

- NFI Design Meets Driving Requirements and Science Objectives
- NFI is currently in TVAC
- NFI will be verified after environmental testing.
- NFI is on target for S/C delivery and integration in August

GO NFI
GO PUNCH

Backups

Instrument Layout

GOES-U CCOR-1

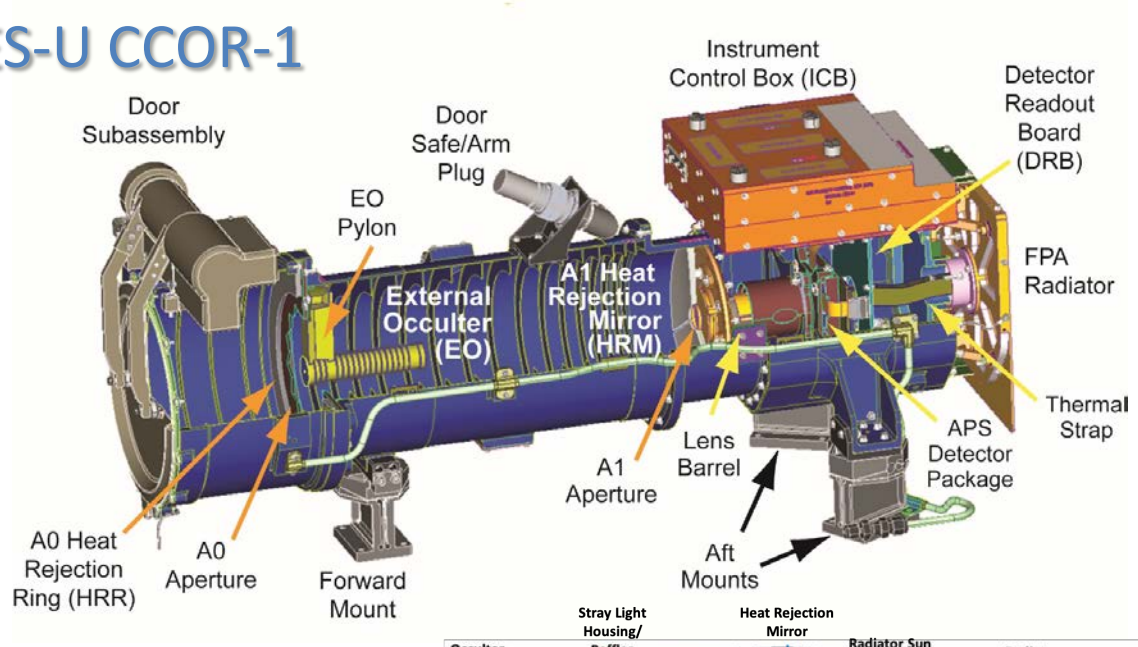

SWFO CCOR-2

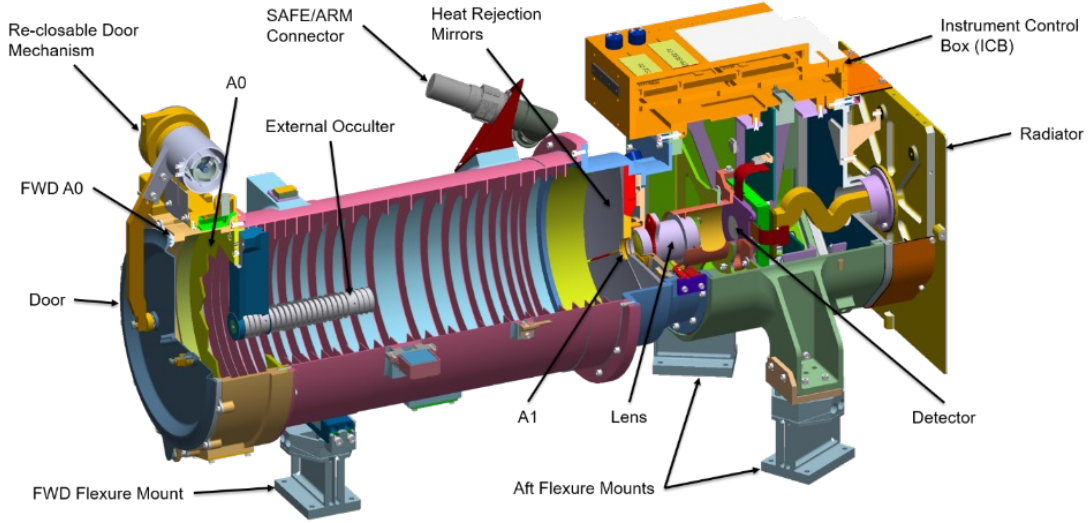

PUNCH NFI

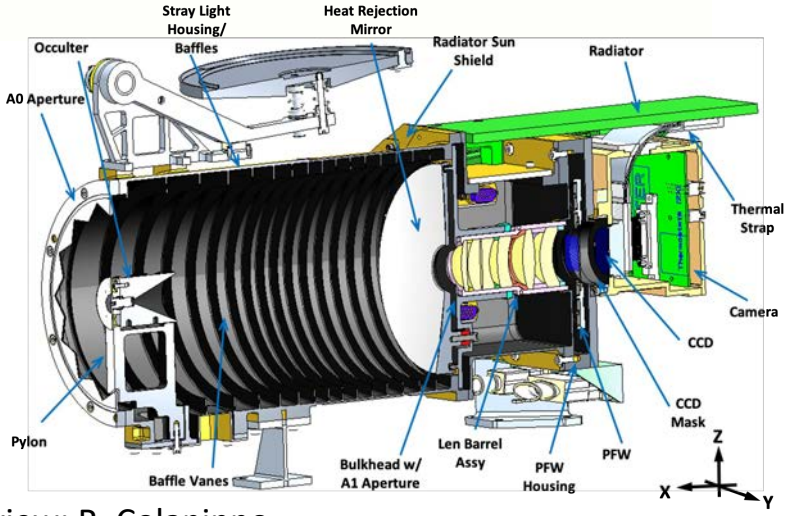

ESA vigil CCOR-3

Project Overview

	PUNCH NFI	GOES-U CCOR-1	SWFO CCOR-2	vigil CCOR-3
Mission	NASA PUNCH	NOAA GOES Program	NOAA SWFO-L1	ESA vigil
Classification	Class D	Tailored Class C	Tailored Class C	--
Focus	Research/Science	Operations	Operations	Operations
Phase	Start of Integration	S/C Environmental Testing	Integration	Development
LV	Falcon 9 - SPHEREx ride share	Falcon Heavy	Falcon 9 Full Thrust - IMAP ride share	--
Orbit	LEO 6am/6pm	Geosynchronous	Lagrange 1	Lagrange 5
Lifetime	2 years	15 years	5 years	--
FOV	6 - 32 $R_\odot$	3.5 – 17 $R_\odot$	3.0 – 22.0 $R_\odot$	3.0 – 22.0 $R_\odot$
Detector	RAL provided CCD	NRL APS	NRL APS	NRL APS
C&DH/FSW	SwRI provided	NRL provided	NRL provided	NRL provided
Data Resiliency	50%	100%	100%	--
Cadence	8 min	12 minutes	12 minutes	--
Data Latency	12 hours (SSC-US)	15 minutes	15 minutes	--

Lens Assembly Inspections and Testing

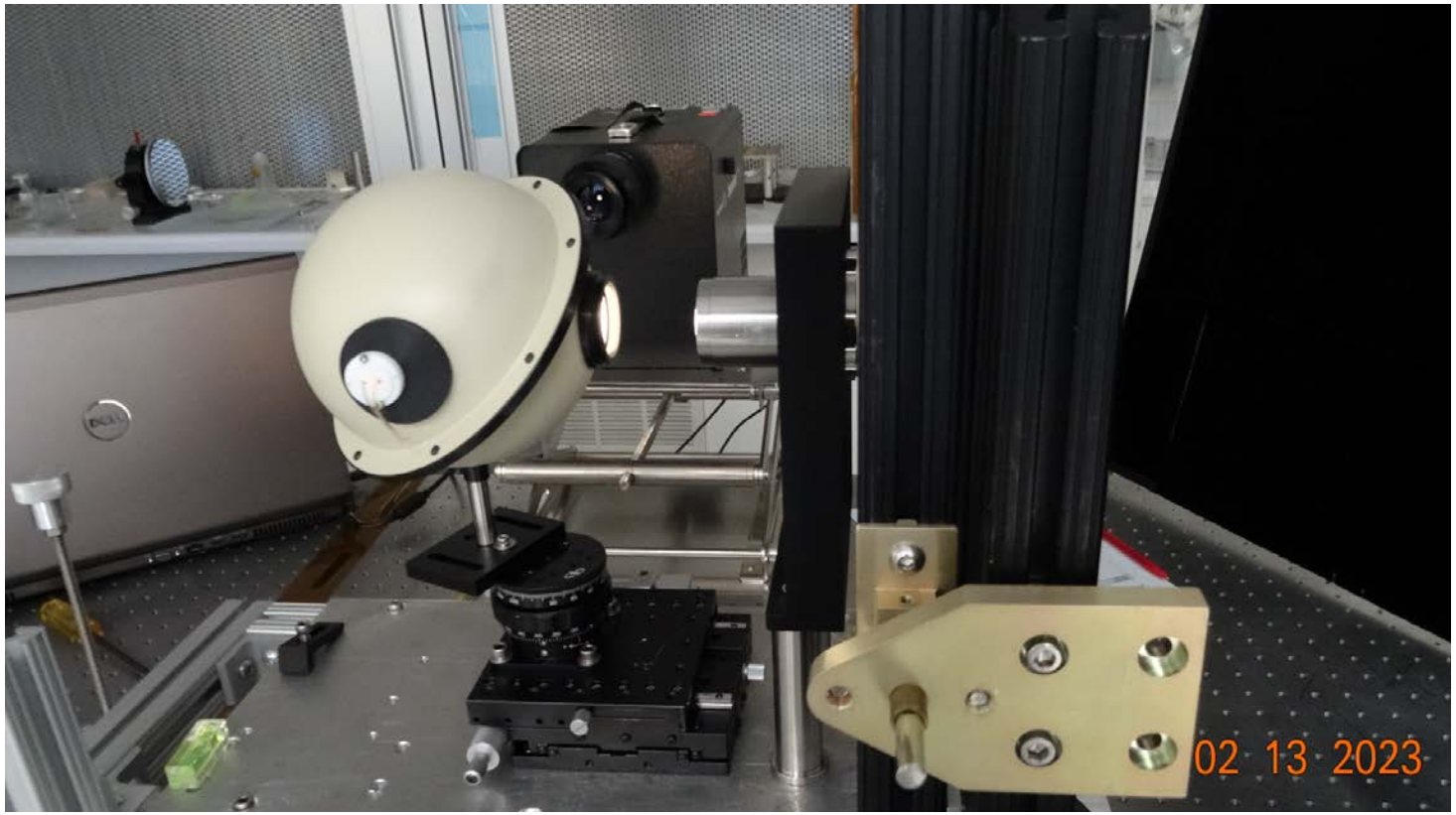

Lens Integration

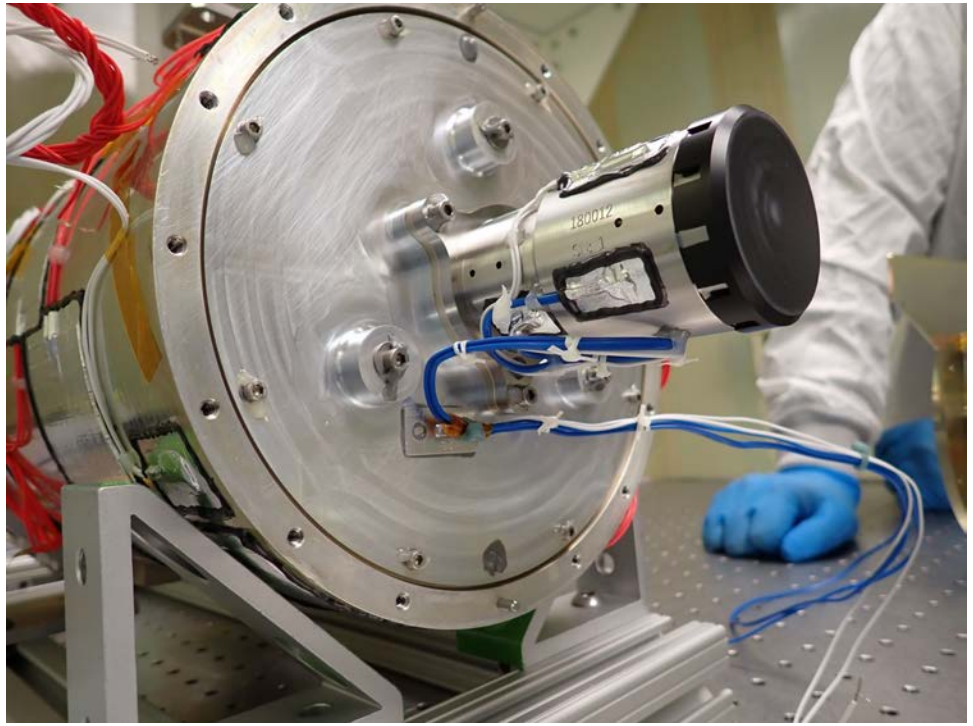

Lens assembly integrated onto the baffle and A1 bulkhead.

Black light inspection of lens assembly after installation.

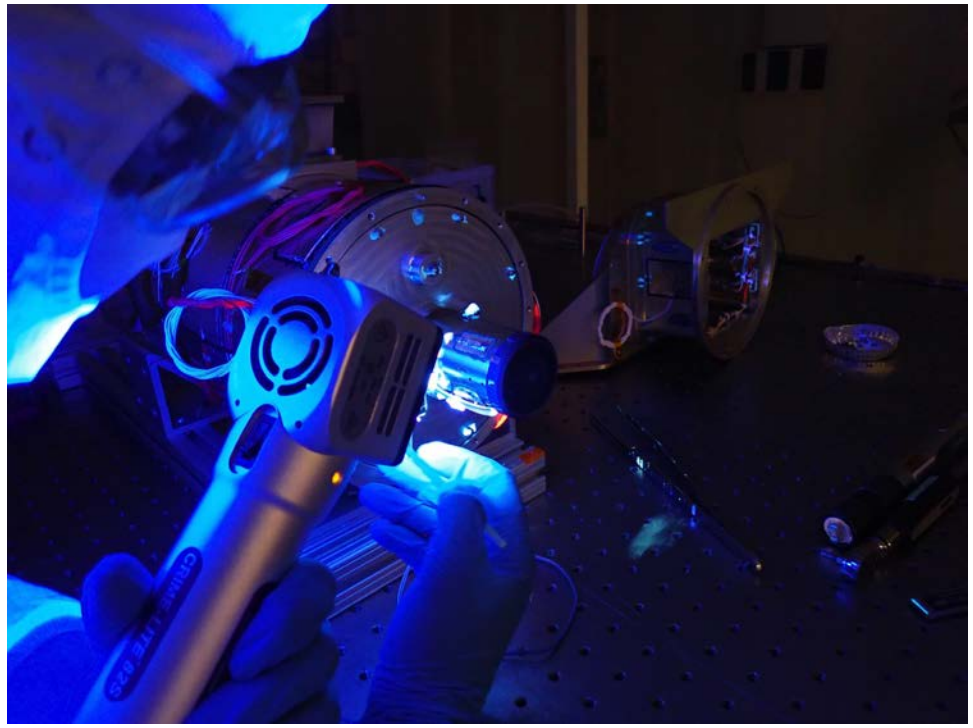

FM Hardware

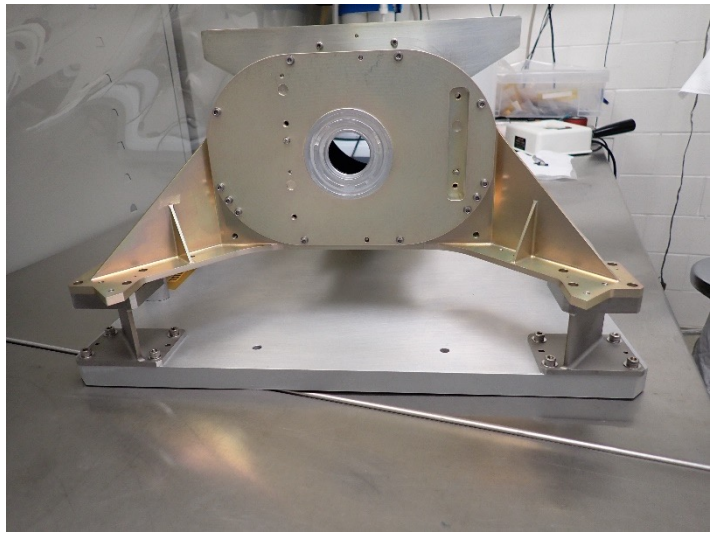

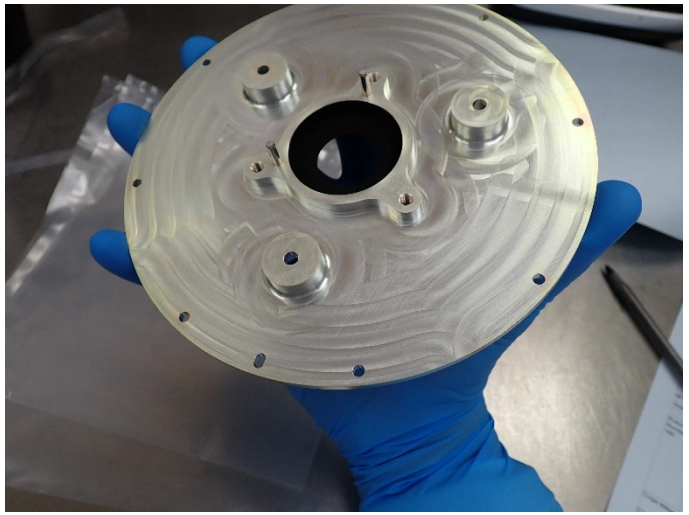

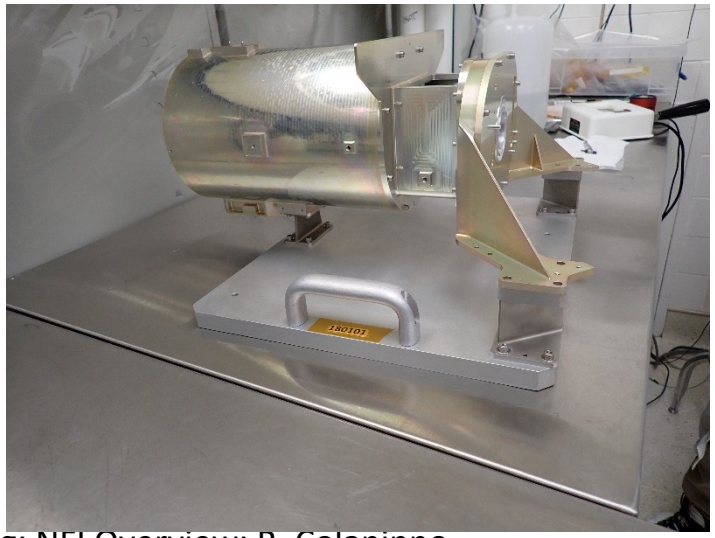

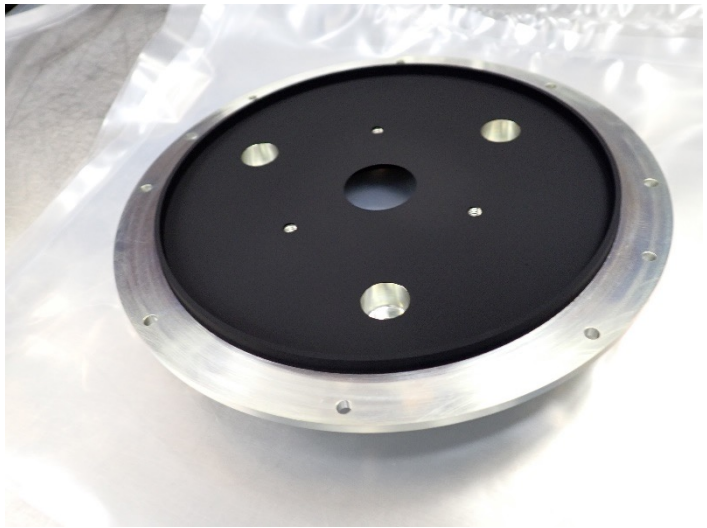

AI&T Highlights

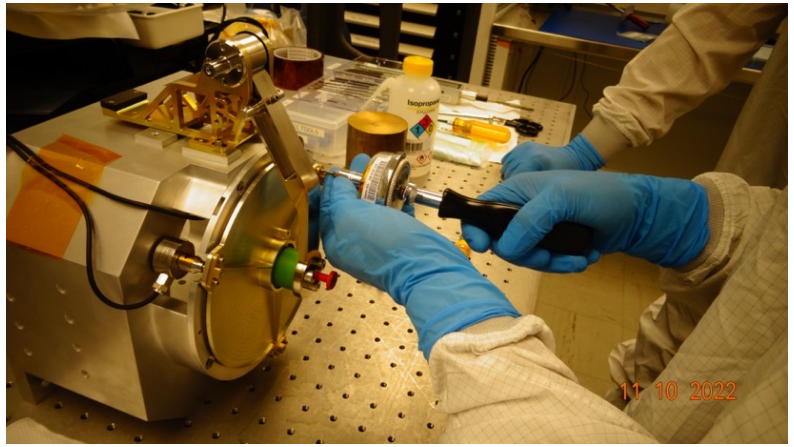

Torquing of Door Cone to GSE Force Gauge Interface

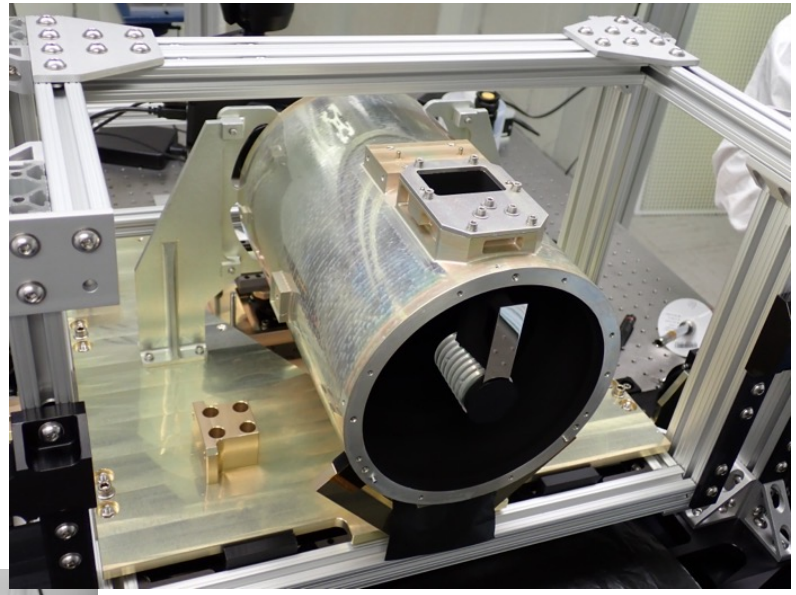

Assembled Baffle for HRM Alignment Testing

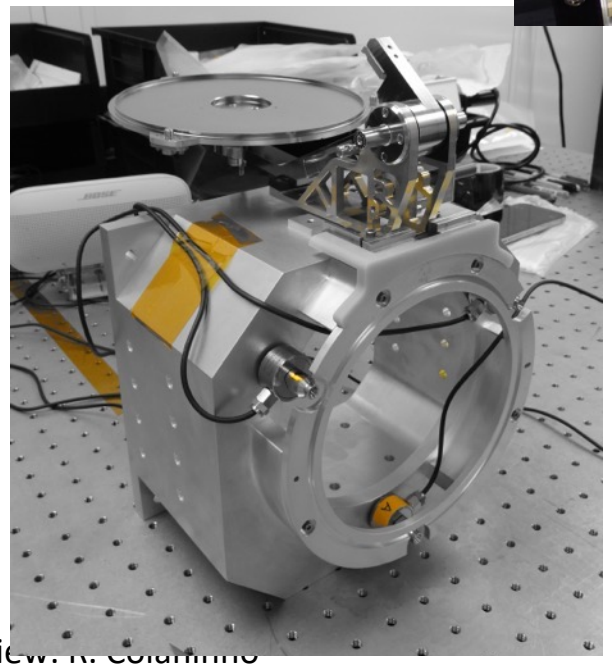

Assembled Flight Door on GSE Fixture

Flight HRM After Helicoil Installation

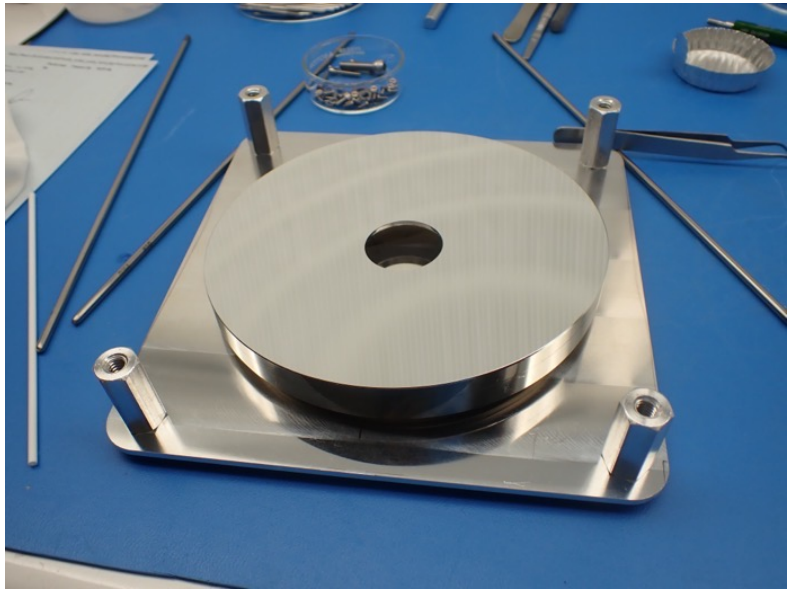

HRM Installation and Alignment Testing

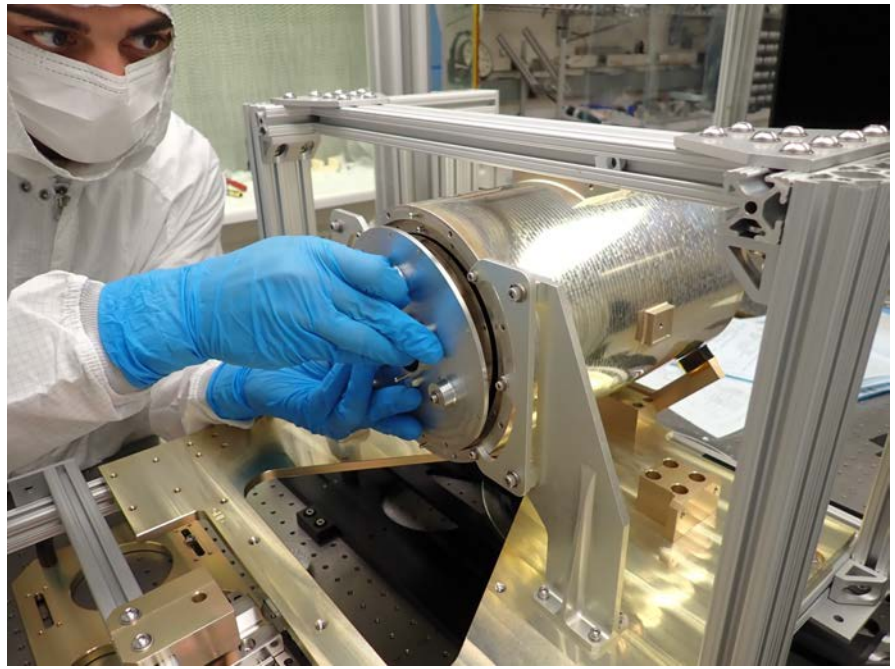

HRM and Bulkhead Installation

Melinex Target for HRM Alignment Testing

Incoming LASAR Points at Outer Field of View

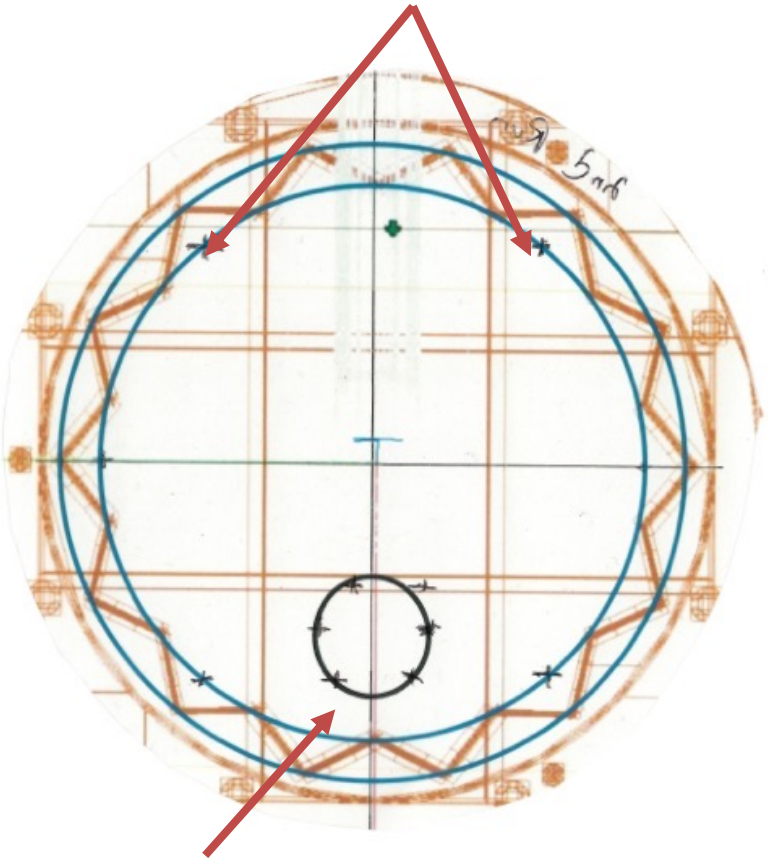

Focus Ring with LASAR Return
Measurements Marked
Meets Requirements

Baffle Illuminated with Alignment Target

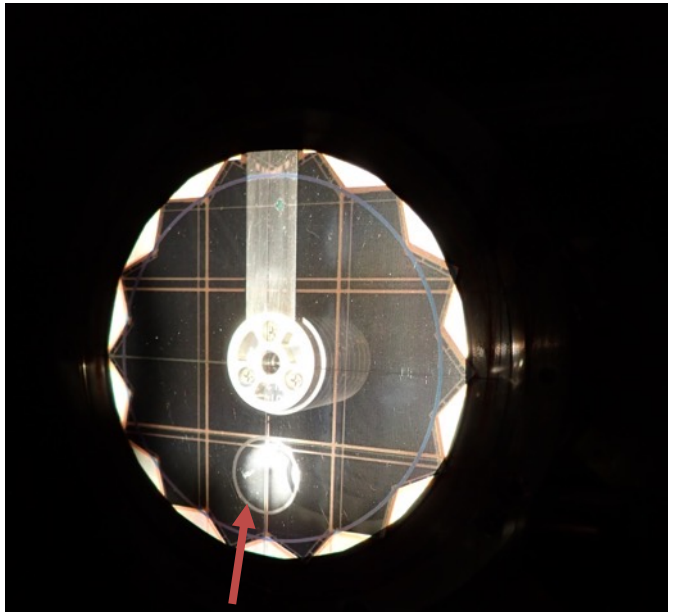

Focus Ring with Return
All light reflected off the HRM focused into return ring.
Meets Requirements

Pylon and Occulter Installation and Alignment

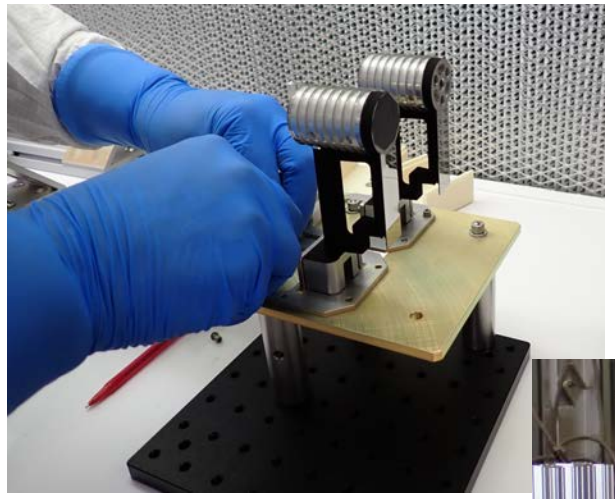

Flight and Spare Pylon and Occulter

Occulter Alignment Setup

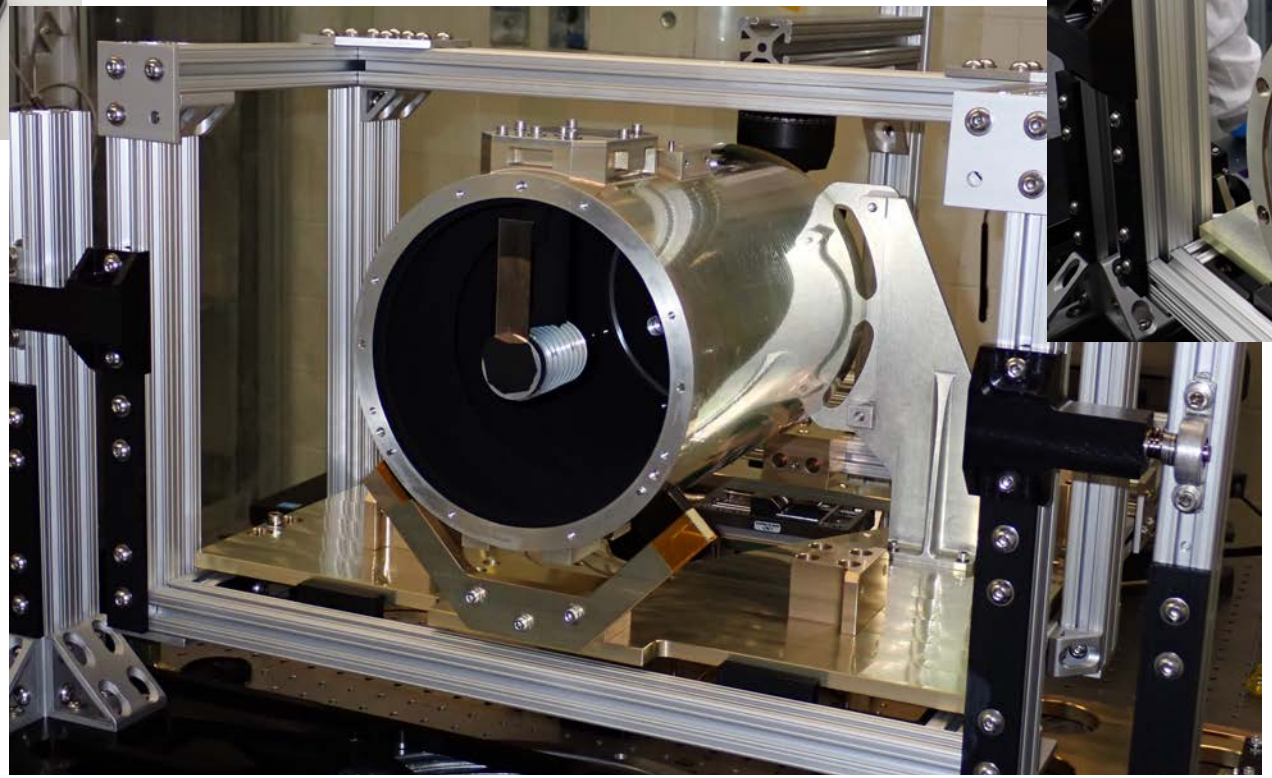

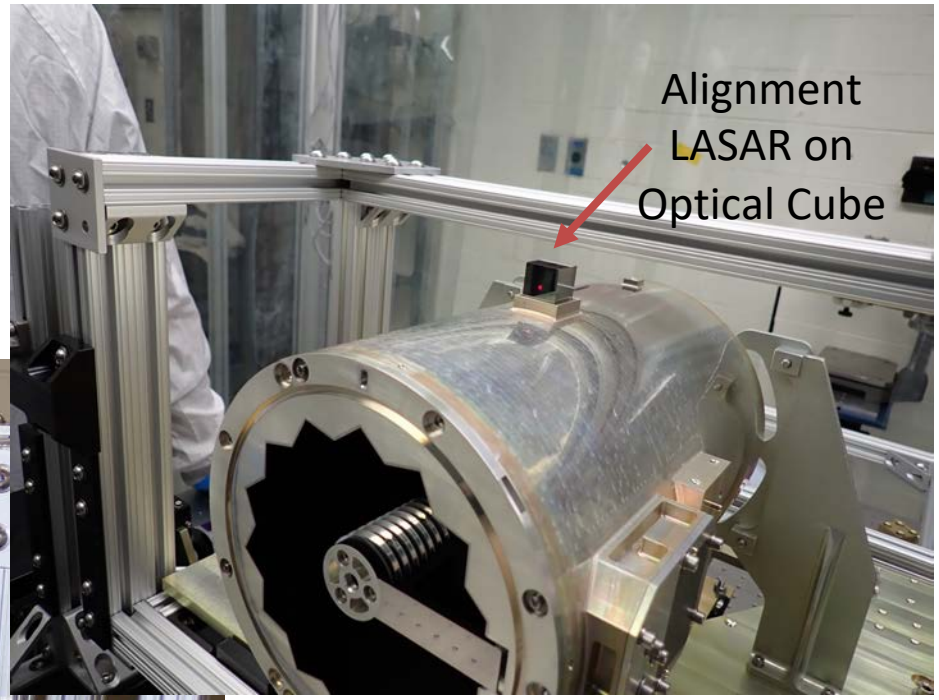

Boresight to Optical Cube Measurement

AI&T Highlights

Actuator Harness Routing Inspection
(not flight tie downs)

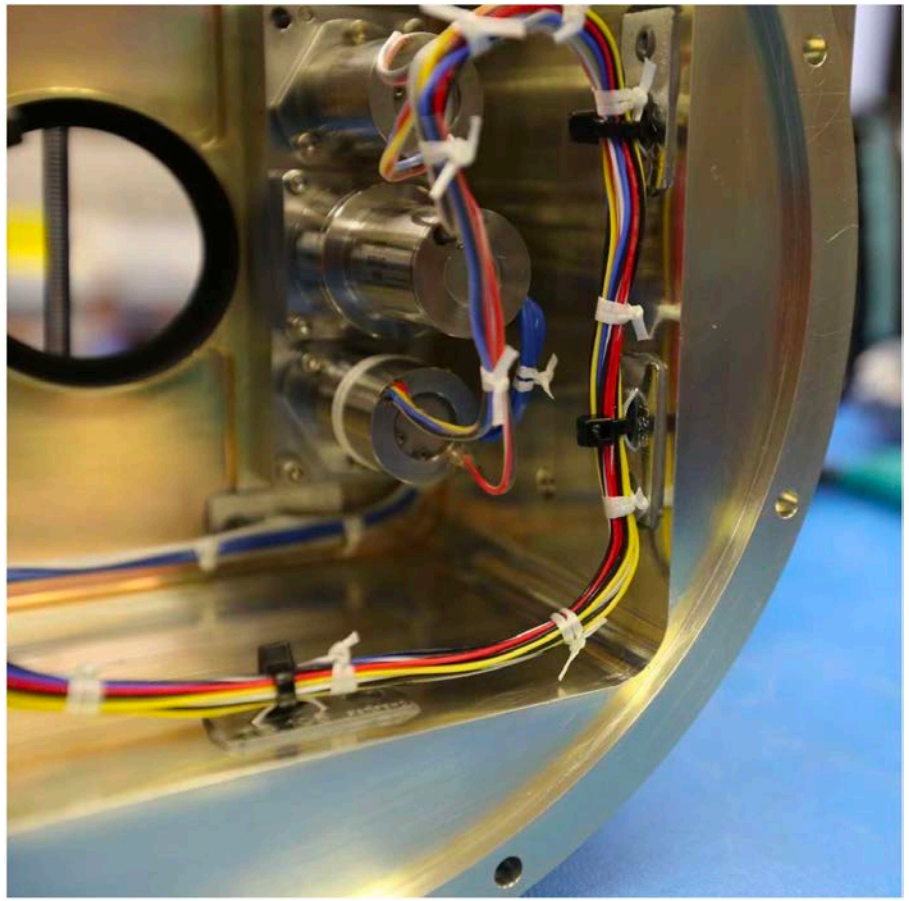

Door Functional Test

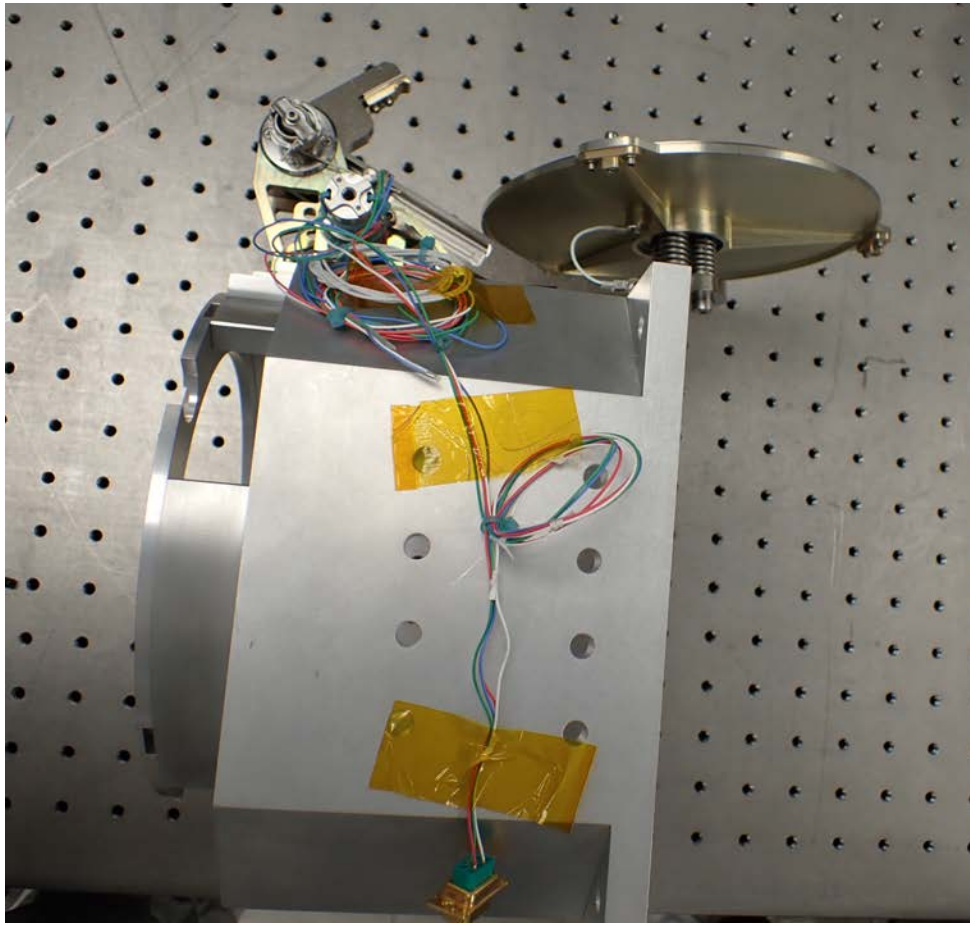

Match Drilling and Pinning for S/C Interface

Mechanical Assembly

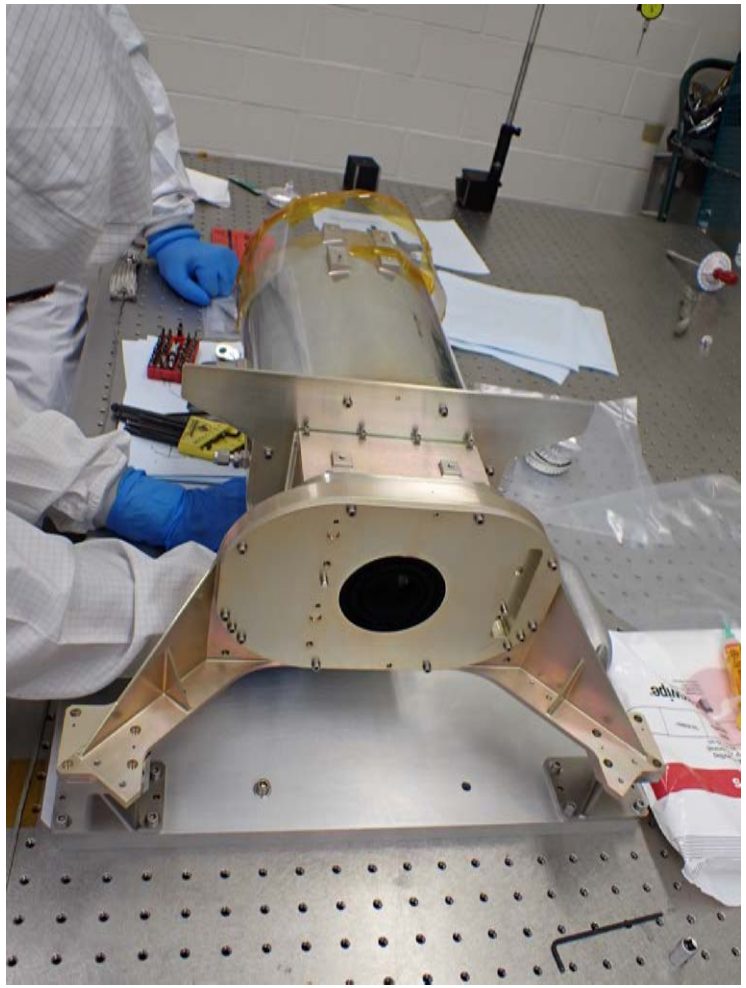

Double Bagging

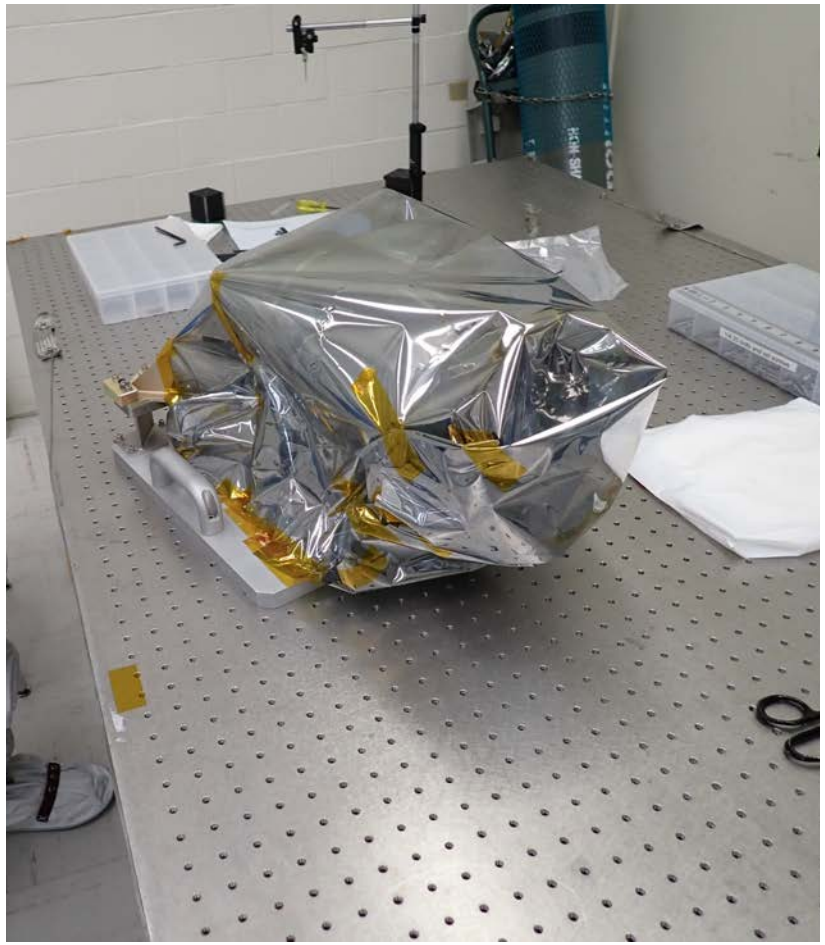

Drilling

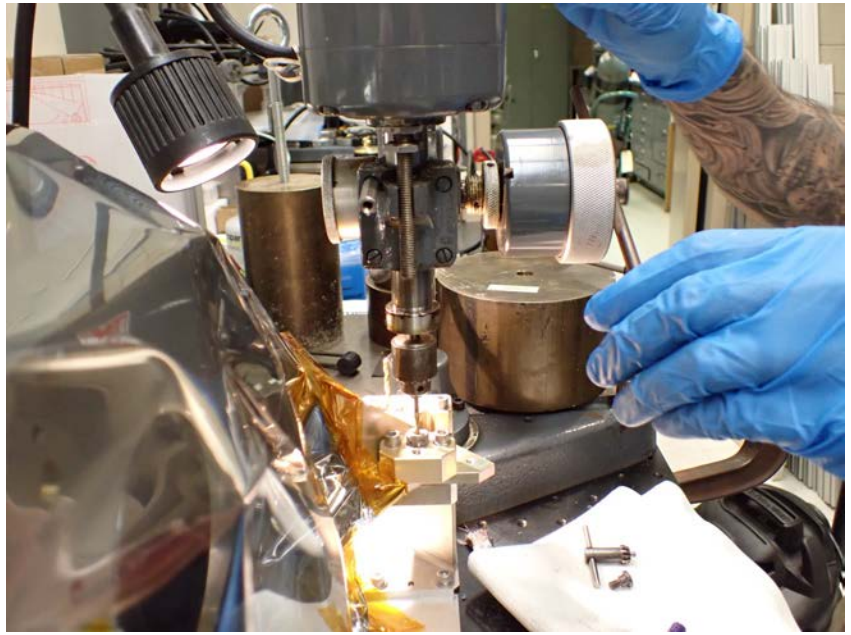

Backend Weight

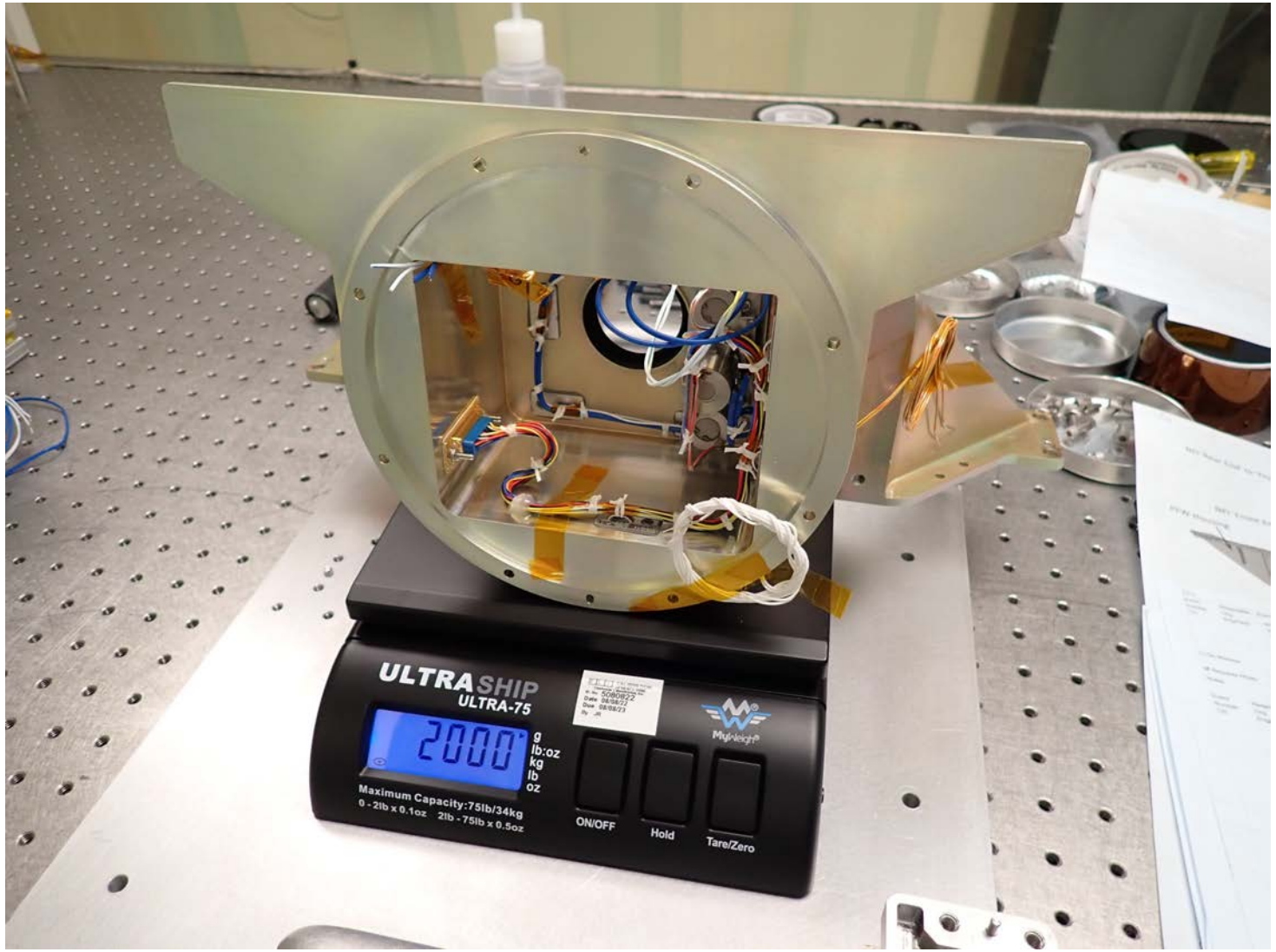

- NFI backend with PFW actuator installed and interior harness completed.
- Weighting sub-assembly before integration with NFI baffle.

Backend and Baffle Integration

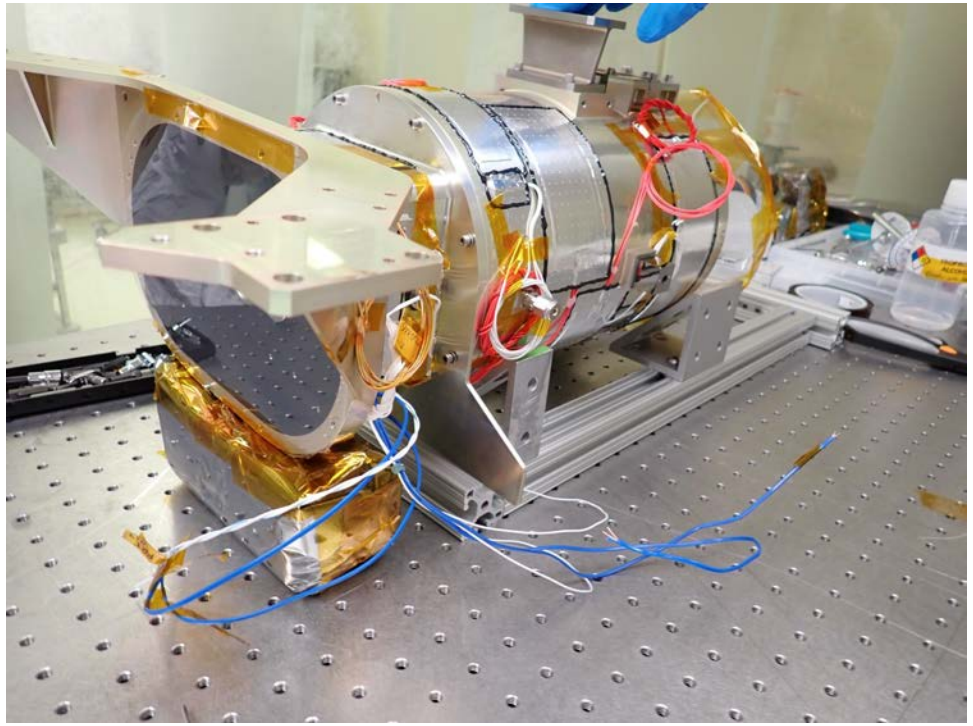

NFI baffle and backend integration - instrument flipped to access fasteners.

NFI baffle and backend integration completed.

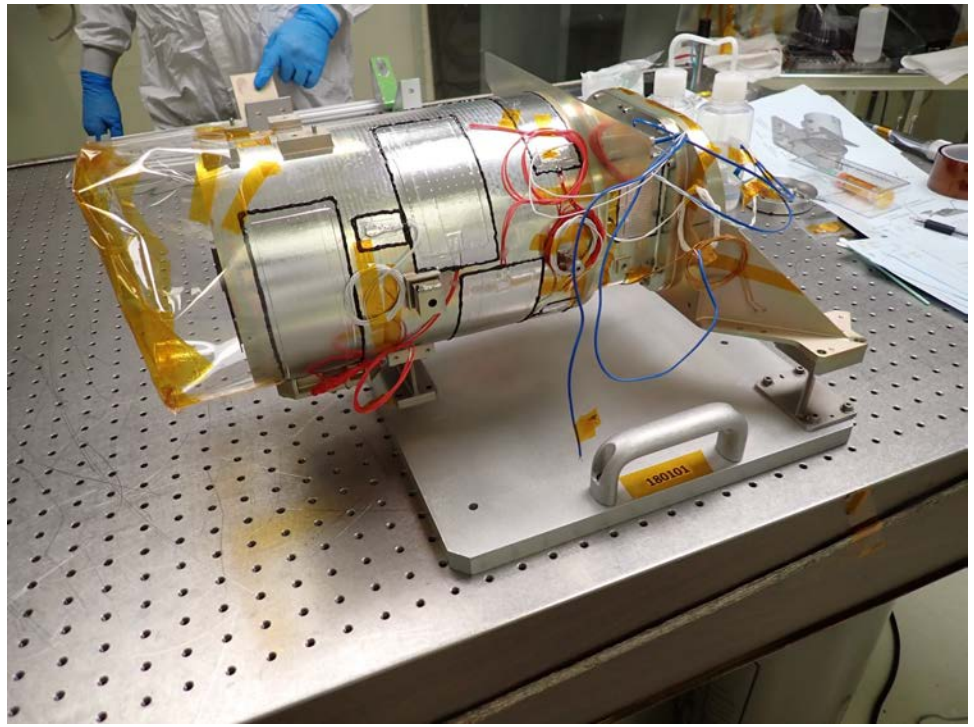

Filter Wheel Integration / FM Camera Pre-Bakeout

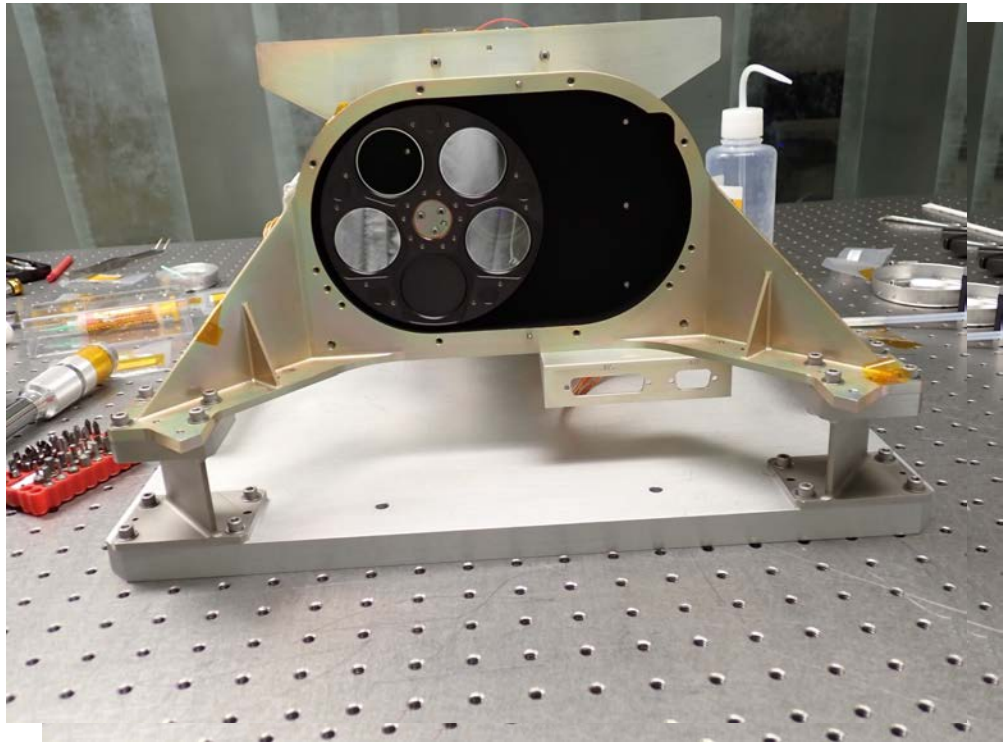

Filter wheel integrated to NFI housing and actuator prior to characterization testing.

FM camera pre-bakeout inspection.

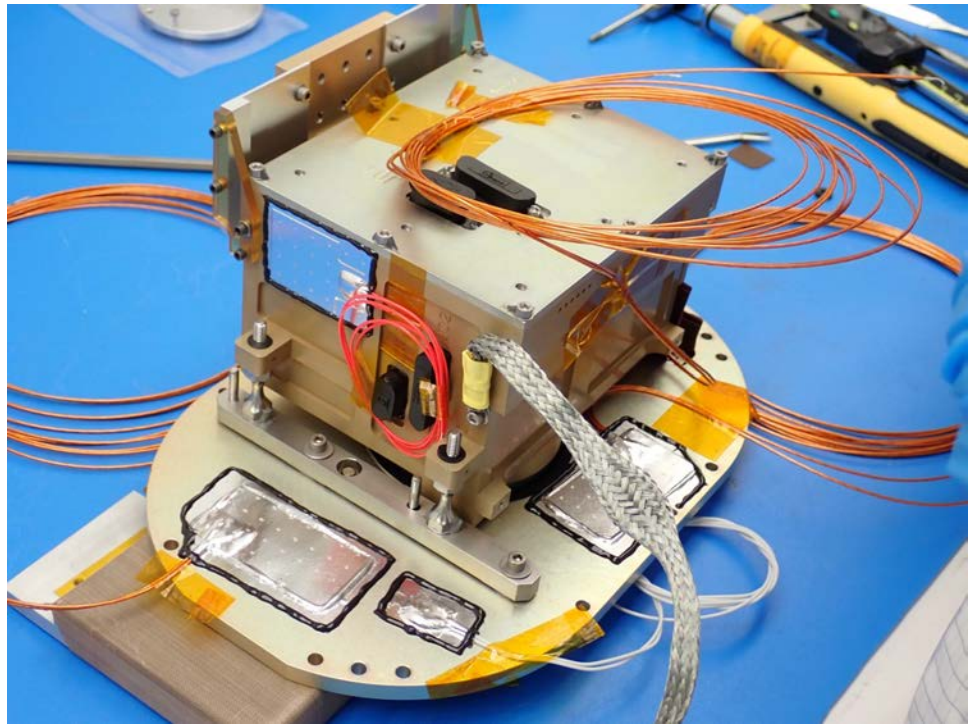

NFI Integration

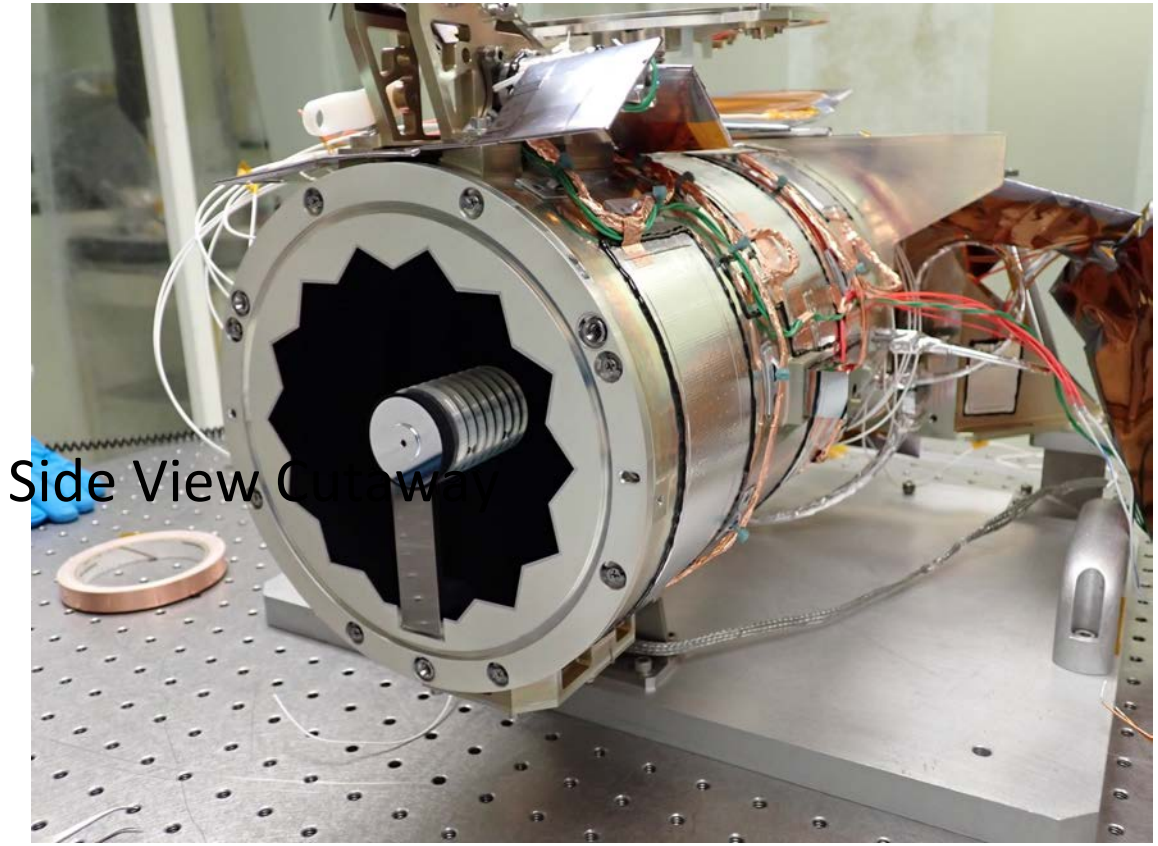

NFI front end with integrated door prior to blanket installation.

NFI backend prior to blanket and radiator installation.

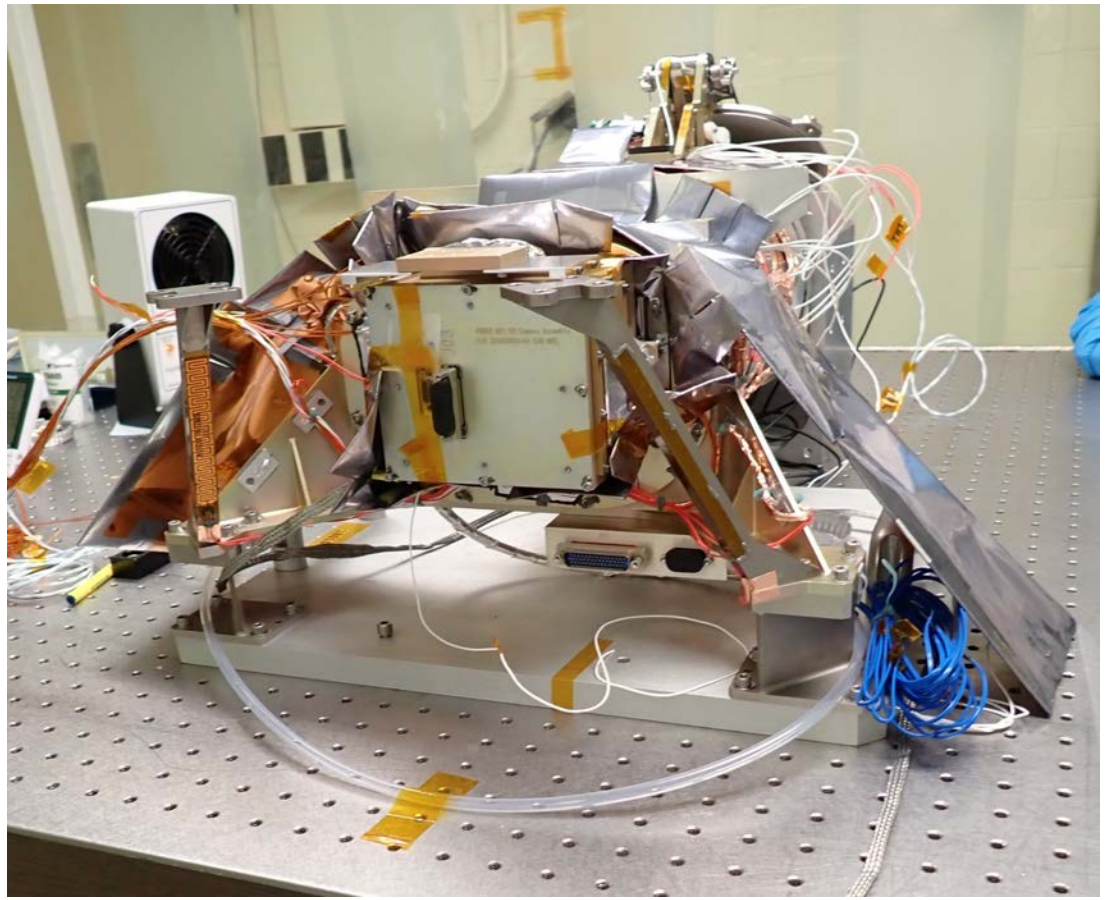

NFI Integration

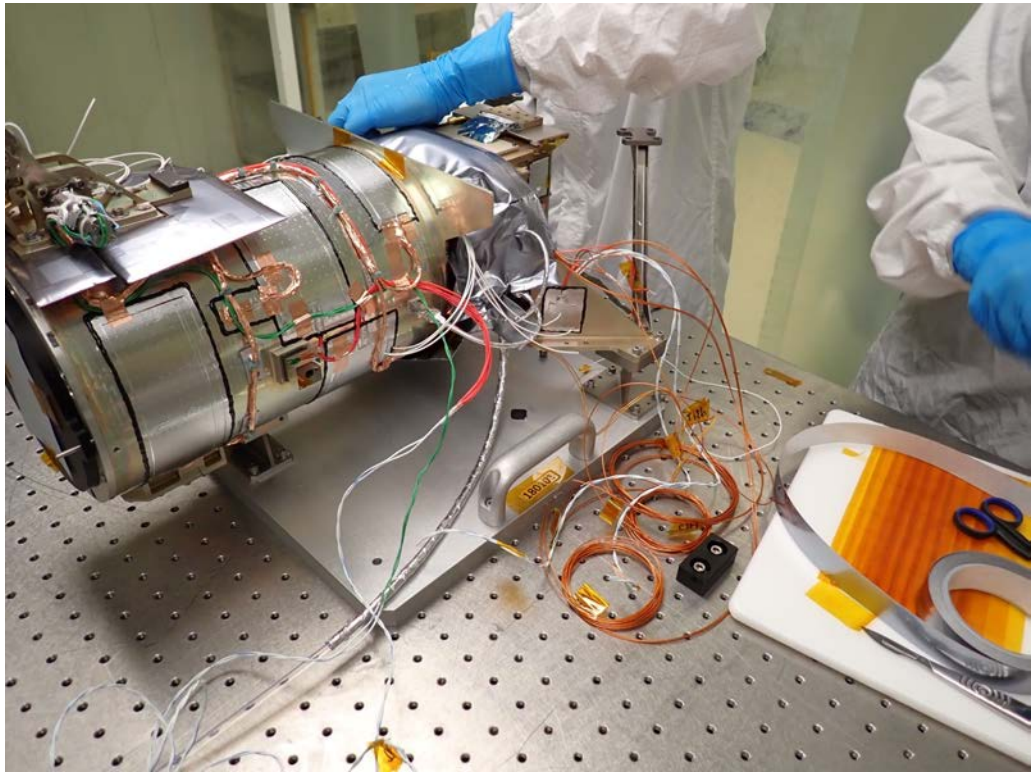

NFI during final flight and GSE harness closeout.

GO Team NFI. GO PUNCH.

NFI Integration complete ahead of SCOTCH Testing

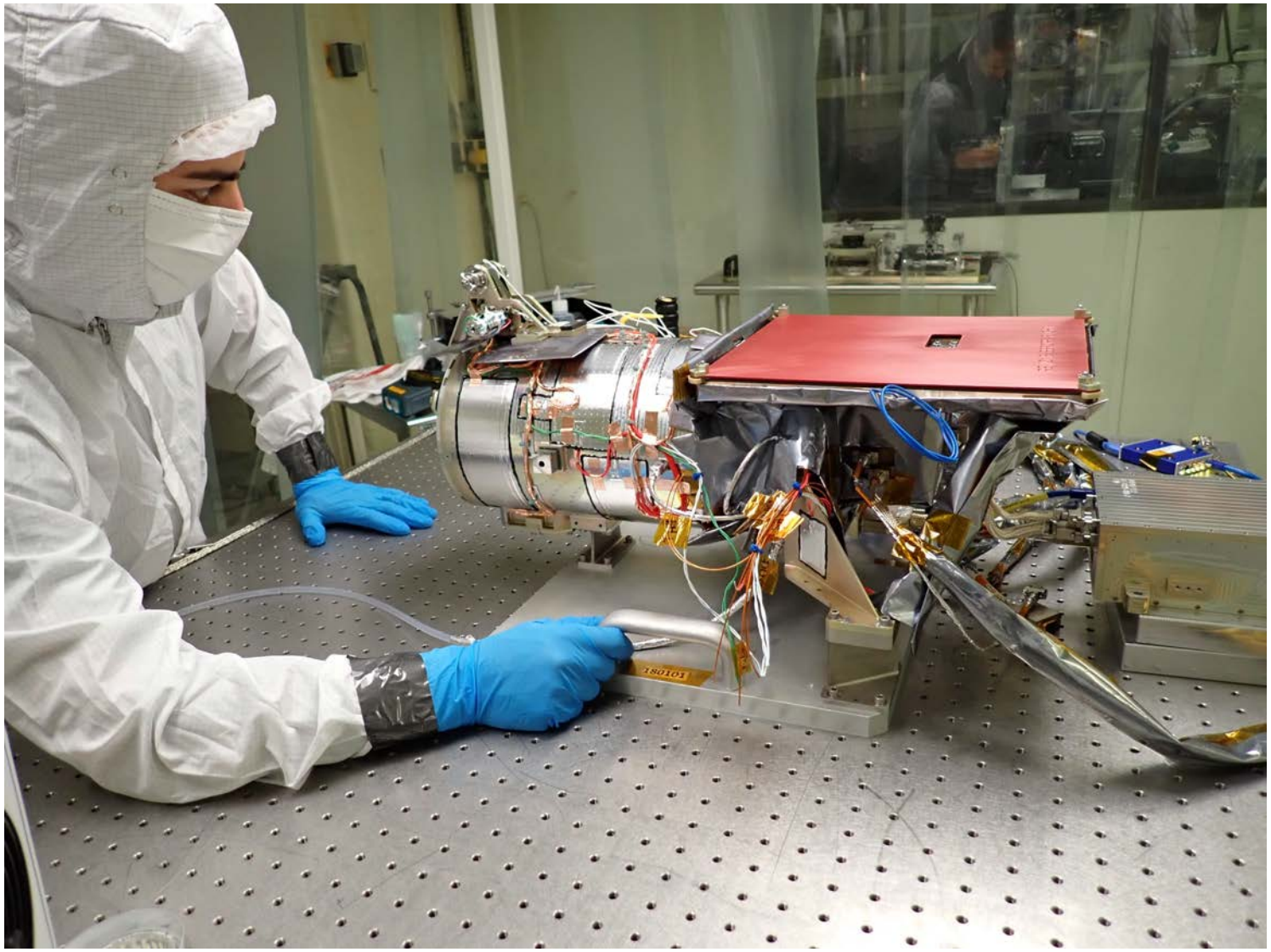

NFI Transportation to SCOTCH Facility

NFI Installation in SCOTCH

NFI Installation in SCOTCH

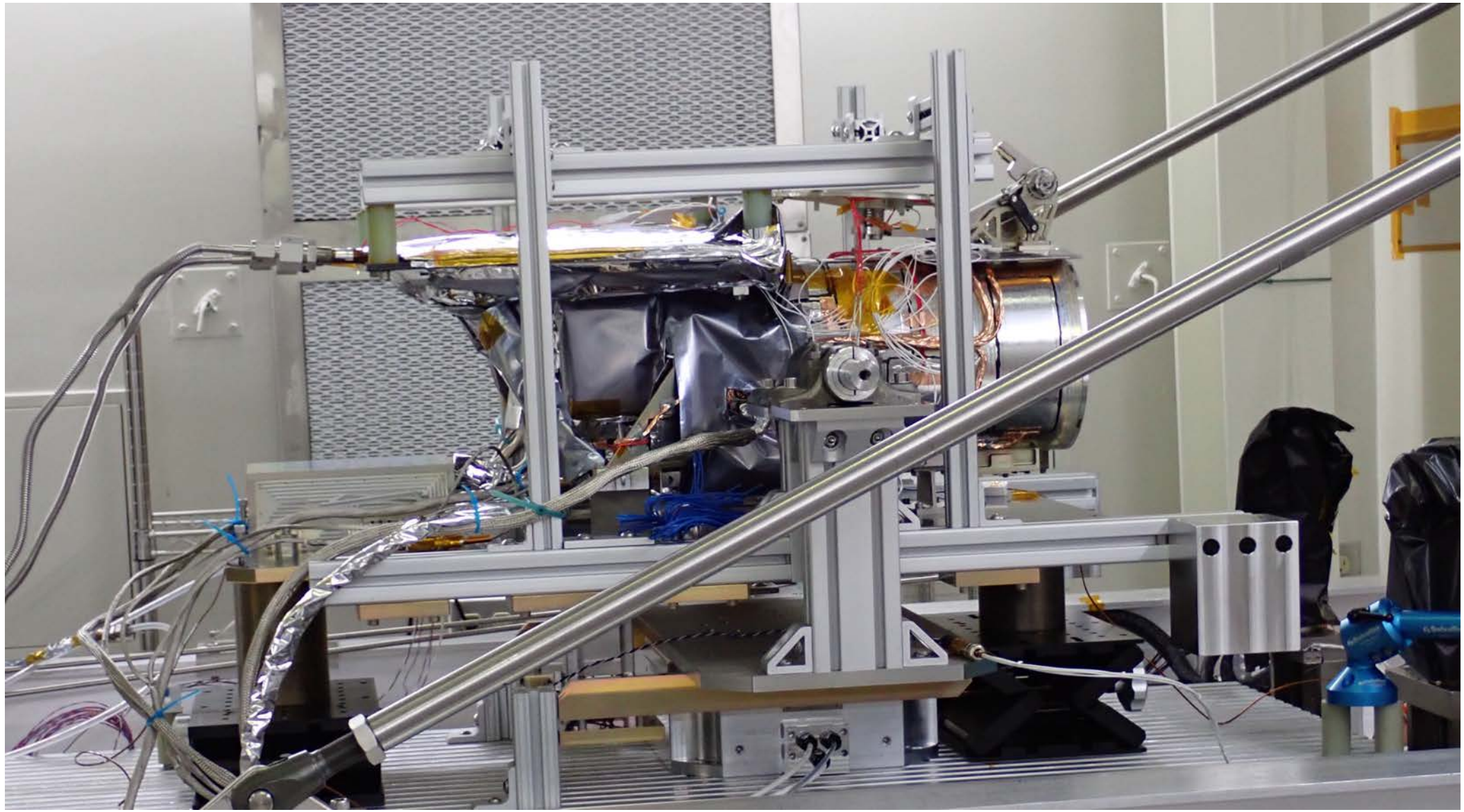

NFI Optical Alignment in SCOTCH